广州数控设备有限公司
GSK CNC EQUIPMENT CO., LTD.

Add: No.7, 1st. Street, Luochong North Road, Luochongwei, Guangzhou, 510165, China
Http://www.gsk.com.cn E-mail:sale1@gsk.com.cn
Tel: 86-20-81796410/81797922 Fax: 86-20-81993683

Dec. 2010/ Edition 4
Apr. 2011/ Printing 1

GUANGZHOU
CHINA

USER MANUAL

DAH01,DAH2075E AC Servo Drive Unit

广州数控设备有限公司
GSK CNC EQUIPMENT CO., LTD.

This user manual describes all items concerning the operation of this CNC system in detail. However, it is impossible to give particular descriptions for all unnecessary or unallowable operations due to length limitation and product application conditions；Therefore, the items not presented herein should be considered impractical or unallowable.

Preface

Dear users,

We are honored by your purchase of all-digital AC servo drive units with high speed and high precision of DAH series of GSK CNC Equipment Co., Ltd.

This manual comprehensively introduces the installation, connection, debugging, operation and maintenance of the all-digital AC servo drive unit of DAH Series (including DAH01 and DAH2075E) for your easy understanding as well as flexible and efficient application. It provides related knowledge and safety items for the application of the drive unit. Please read the safety notes carefully before using the product.

In order to give full play to the function of the all-digital AC servo drive unit with high precision and high speed of DAH series and ensure your safety, please read the manual carefully before using the product and operate the drive unit correctly in strict accordance with the safety notes and operation methods in the manual.

- Improvement, specification and version for the product are subject to change without notice.
- If the user modifies the product, our company doest not assume any responsibility, meanwhile, the warranty certificate is no longer available.

This user manual shall be kept by end user.

Sincere appreciation—— Thank you for your kind support when you are using the products of Guangzhou CNC Equipment Co., Ltd.

Warning

To avoid operator and other personal injury and machine damage, please pay special attention to the following warning labels while reading the manual.

■ **The signs below indicate the danger levels during operation. The content of them is extremely important and must be observed.**

Danger	Incorrect operation will cause damage or death.
Caution	Incorrect operation will cause medium or slight injury, even property loss.

Note If this label is not noticed, unexpected results and situation will occur.

Remind user of important requirements and instructions during the operation.

■ **The following signs indicate what must be done and what must not be done.**

It indicates prohibition (must not be done)

It indicates enforcement (must be done)

Danger

Please tighten each terminal of the main circuit with appropriate force.

If the user does not obey the instruction, it will cause connection loosing, wire spark and even a fire.

Please mount the drive unit on nonflammable subject, and keep it far away from inflammable materials.

If the user does not obey the instruction, it will cause a fire.

Please make sure the power is off before wiring.

If the user does not obey the instruction, it will cause electric shock.

Install a breaker, interference filter and AC reactor.

If the user does not obey the instruction, it will cause lightning, fault or damage.

Wiring and overhaul must be done by electric engineering professionals.

If the user does not obey the instruction, it will cause electric shock or a fire.

Operations of moving, wiring, checking and maintenance can be done 5 minutes after power off.

If the user does not obey the instruction, it will cause electric shock.

The ground terminal PE of the servo unit must be earthed.

If the user does not obey the instruction, it will cause electric shock.

Install an emergency switch.

If the user does Not obey the instruction, it will cause Injury, fault and equipment damage. .

Danger

Ensure the wiring is correct.

If the user does not obey the instruction, it will cause equipment damage and electric shock.

Please tight the power terminal and motor output terminal.

If the user does not obey the instruction, it will cause a fire.

Please do not open the cover of the terminal board in the state of Power On or running.

If the user does not obey the instruction, it will cause electric shock.

Please do not directly touch the connection terminal of the main circuit of the drive unit.

If the user does not obey the instruction, it will cause electric shock.

Please do not touch the switch with wet hand.

If the user does not obey the instruction, it will cause electric shock.

Please do not put hands into the servo unit.

If the user does not obey the instruction, it will cause electric shock.

The drive unit may startup suddenly when the power is recovered. Do not operate the shaft device of the Servo motor immediately.

If the user does not obey the instruction, it will cause personal injury.

Don't prevent heat diffusion or put foreign bodies inside the radiator fan or radiator.

If the user does not obey the instruction, it will cause damage or a fire.

Don't put the cable on sharp edge. Don't make the cable bear heavy load or tension.

If the user does not obey the instruction, it will cause electric shock, trouble or damage.

When removing the cover on the terminal board, do not operate spindle drive device with power on.

If the user does not obey the instruction, it will cause electric shock.

Caution

The wiring between the drive unit and motor should be performed strictly in term of the wiring diagram.

If the user does not obey the instruction, it will cause equipment damage.

The voltage level loaded on each terminal must use the one specified in the user manual.

If the user does not obey the instruction, it will cause equipment damage.

Load operation can be done after successful no-load trial operation.

If the user does not obey the instruction, it will cause equipment damage.

Eliminate the fault before operation when an alarm occurs.

If the user does not obey the instruction, it will cause equipment damage.

Please connect the brake resistance according to the wiring diagram.

If the user does not obey the instruction, it will cause equipment damage.

Match the motor with a proper servo unit.

If the user does not obey the instruction, it will cause equipment damage.

Please do not change, dismantle or repair the drive unit.

If the user does not obey the instruction, it will cause equipment damage.

Do not hold the cable and motor shaft during motor transportation.

If the user does not obey the instruction, it will cause equipment damage.

Caution

Please do not touch the motor and radiator of the servo unit which may be in high temperature during operation.

If the user does not obey the instruction, you will be burnt.

The parameters cannot be altered and changed extremely.

If the user does not obey the instruction, it will cause equipment damage.

Do not connect power input wires R, S, T to motor output terminals U, V, W.

If the user does not obey the instruction, it will cause equipment damage.

If the elements of the spindle drive unit are incomplete or damaged, do not operate the drive unit. Please contact the seller immediately.

If the user does not obey the instruction, it will cause equipment damage.

The internal electronic devices of an abandoned drive unit are not reusable and taken as industrial waste.

If the user does not obey the instruction, it will cause accident.

Please do not turn on/off the power frequently.

If the user does not obey the instruction, it will cause equipment damage.

Safety Responsibility

Manufacturer Responsibility

——Be responsible for the danger which has been eliminated and/or controlled on design and configuration of the provided servo unit and accessories.
——Be responsible for the safety of the provided servo unit and accessories.
——Be responsible for the provided information and advice for the users.

User Responsibility

——Be trained with the safety operation of the servo unit and familiar with the safety operation procedures.
——Be responsible for the dangers caused by adding, changing or altering the original servo unit and the accessories.
——Be responsible for the danger without following the operations, maintenances, installations and storages described in the manual.

Contents

CHAPTER 1 OVERVIEW

1.1 Product Introduction

The AC servo drive unit (all digital AC drive unit with high precision and high speed) of DAH series (including DAH01 and DAH2075E) is a new generation of high-precision and high-speed AC servo product produced by our company. It can be used together with various open-loop and closed-loop control systems. The servo unit uses an international advanced special chip for motor control (TMS320F2812PGFA DSP), a large scale programmable gate array（CPLD/FPGA）and an IPM intelligent power module. It is of high integrated level, small dimension, safe protection and high reliability. Its performance has reached the advanced level of similar foreign products, for an optimal PID algorithm is used to complete PWM control; besides, it can intelligently identify various servo motor models and has parameter auto setting function. Its servo motor uses a 17 bits high-precision absolute encoder. The servo drive unit of the series can be applied to mechanical manufacture, CNC machines, printing and packing machines, textile machines, robots, automatic manufacturing lines and other automation fields.

DAH series AC servo unit has the following advantages:

- Using the most advanced 32-bit DSP processor (F2812) of TI Company to shorten signal processing time and improve current sampling precision. System processing capability has been greatly improved due to the 150MIPS of frequency of F2812.
- The system uses a 17-bit absolute encoder with 131072 lines. Compared with incremental encoders, absolute encoders are characterized by high positioning precision, strong anti-interference ability, motor rotor position memory and convenient installation.
- Bus communication uses GSK-LINK communication mode, which can fully meet the control requirement of more than five axes. Up to 254 servo drive units can be connected theoretically, and data transmission rate is 100Mbit/s；
- Fully closed loop control between CNC and servo unit, on-line upload and download of servo parameters, diagnostic message feedback of the servo and servo alarm monitoring can be realized in bus communication mode; memorizing workpiece coordinate system after power-off and returning to zero point without a stroke limit switch are realized too;
- Analog instruction interface uses a high–precision A/D (16 bits) convertor. It has strong anti-interference ability and small zero drift.
- High speed and high precision: a servo unit can drive a servo motor of 6000r/min; speed ratio: 1：60000; it has stable torque characteristics from low speed to high speed; rotary positioning precision: 0.0762μm；
- Intelligent identification for motor models and auto-setting control for parameters: DAH series AC servo unit intelligently reads various models and parameters into the servo unit when power is turned on. When a motor is replaced with the one of different model, its corresponding default parameter can be resumed automatically; in different load inertia ratios, it can accurately identify system control models and has parameter auto-setting function.
- Simple and flexible control: set the operation mode and operation characteristics of the servo drive unit by modifying parameters to meet different requirements.

1.1.1 Technical Specification of DAH Series Servo Drive Unit

Adaptive motor capacity		0.1kW～6kW
Input power supply	Main circuit	Single-phase or three-phrase AC （0.85～1.1）×220V 50Hz/60Hz
	Control circuit	Single phase AC （0.85～1.1）×220V 50Hz/60Hz
Control mode		Three-phase full wave rectification, IGBT PWM sine wave drive
Feedback mode		17-bit absolute encoder
Ambient conditions	Temperature	Working temperature: 0℃～+40℃ Storage temperature: -40℃～+70℃
	Relative humidity	< 90% （no dewing free from condensation）
	Vibration/impact resistance	<0.5G（4.9m/s^2）/10Hz～60Hz(non-continuous operation)
Speed control mode	Speed control range (based on no locked rotor occurs at rated load)	1: 60000
	Speed variation rate	0～100% load: ±0.01％ Rated voltage±10%:±0.01％
	Speed frequency response	≥200Hz
	Time of acceleration/ deceleration	0～10s
	External speed command input	±10V input voltage
	Internal speed setting	Internal setting for four kinds of speed
	Input impedance	20kΩ
Position control mode	Max. pulse input frequency	0～6.5536M(Hz)
	Input pulse type	1 direction + pulse; 2 CCW+CW pulse train; 3 90° phase difference two-phase pulse; one of the three categories may be selected. Any one of the three types may be selected.
	Input pulse form	1 differential input 2 open collector input
	Electronic gear ratio	1< α/β <32767
	Position signal output	1 phases A, B, Z differential output; 2 phase Z open collector output
I/O signal	Control input signal	1. Servo enable; 2. Alarm clearing; 3. CCW drive prohibition; 4. CW drive disabling; 5. Deviation counter zeroing//speed selection1; 6. Command pulse prohibition/speed selection 2; 7. Zero-speed clamping.
	Control output signal	1. Servo Ready Output; 2. Servo alarm output 3. Positioning completion output/speed arrival output; 4. Brake output

Internal	Communication function	GSK-LINK communication mode; max. number of connections: 254 axes; data transmission rate: 100Mbit/s
Function	High performance function	1. A high-definition encoder is used to realize stable machine operation; 2. A 16-bit high precision A/D conversion chip is adopted to realize high-precision closed loop control, feedback pulse number can be adjusted freely（≤32768）; 3. Motor model automatic identification; 4. On-line upload and download of servo parameters, diagnostic information feedback of the servo and servo alarm monitoring are realized in bus communication mode; 5. Power failure memory for workpiece coordinate system and zero return without stroke limit switch are realized in bus communication mode; 6. Control model identification and parameter auto setting functions.
	Regenerative braking	Built-in
	Frequency dividing output of encoder signals	adjustable dividing frequency Pulse output: 16～32768 (pulse/revolution)
	Protection function	Overspeed, main power overvoltage，power module fault, undervoltage, overcurrent, overload, overheat, brake abnormality, encoder abnormality, encoder communication failure, invalid motor model setting, control power abnormality, position deviation, etc.
	Monitoring function	Motor speed, current position pulse number, position command pulse number, position deviation, motor torque, motor current, straight-line speed, rotor absolute position, command pulse frequency, running state, input/output terminal signal, currently given voltage, etc.
	Display and operation	6-bit LED digital tube, 4 buttons

1.2 Confirmation of the Arrived Goods

1) Please check the received goods in accordance with the following items:

(1) Check whether the packing box is in good condition and the products are damaged in delivery.
(2) Confirm whether the products are the ordered ones according to the nameplates of the servo drive units and servo motors.
(3) Confirm whether the accessories in the packing box are complete in terms of the packing list.

Note

- A damaged or incomplete AC servo unit can not be installed.
- An AC servo unit should be used together with its adaptive servo motor.
- Any questions, please feel free to contact suppliers or our company.

2) **Instruction for Motor Model**

DAH series AC servo drive units can be matched with a variety of servo motors with TAMAGAWA absolute encoders at home and abroad. Users can choose one of these motors in their orders. Information about GSK SJT series servo motors with absolute encoders is provided in chapter eight in the manual, while relative information about servo motors of other models is provided together with the servo motors.

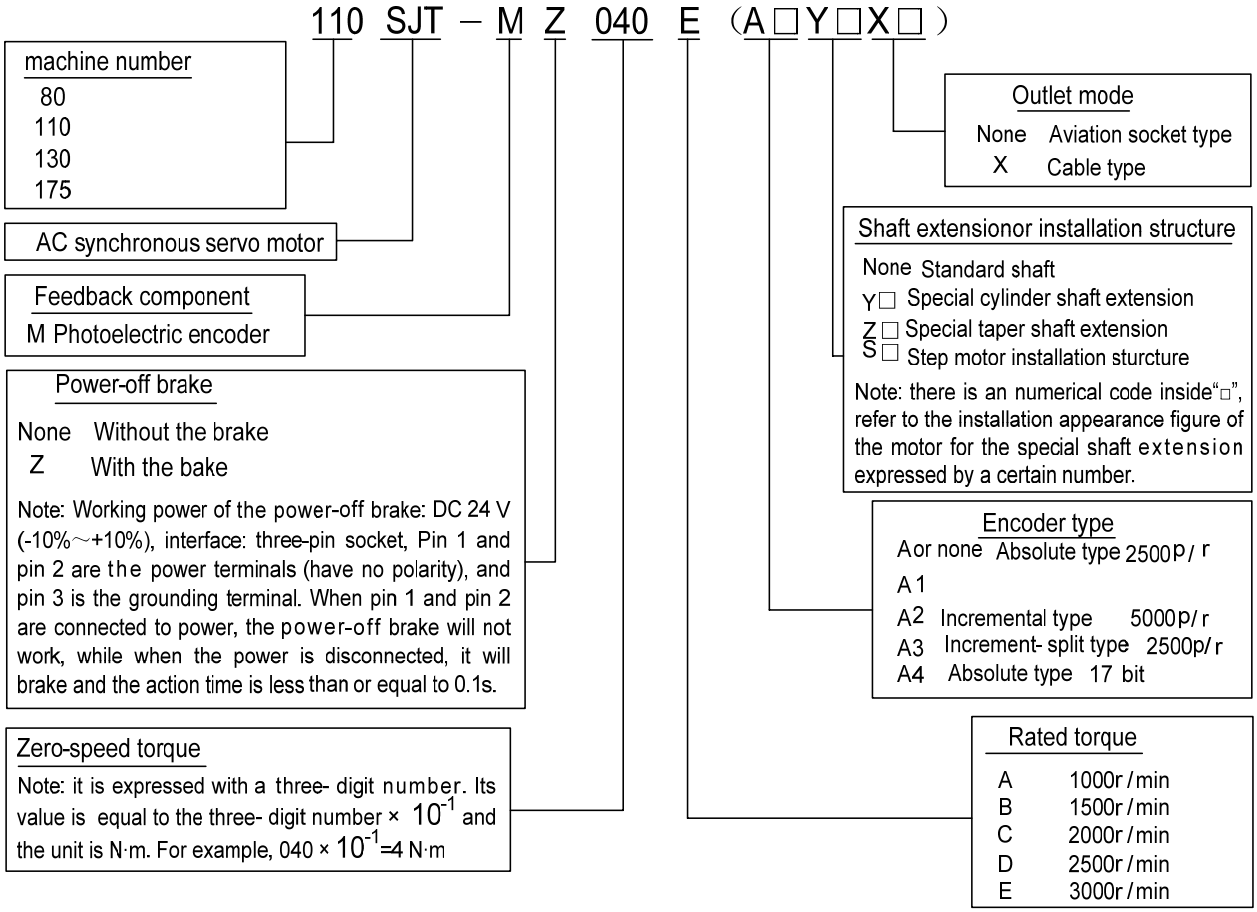

3) **Mechanical Characteristics of Servo Motor**

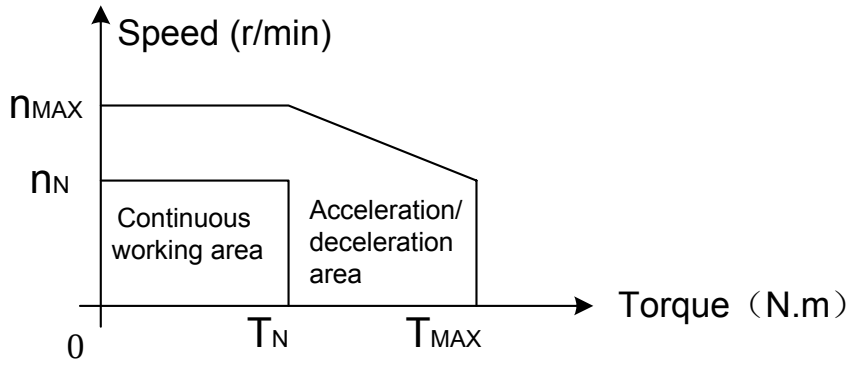

T_N ——— rated torque ； T_{MAX} ——— maximum torque ；

n_N ——— rated speed ； n_{MAX} ——— maximum speed.

4) Order Model Instruction

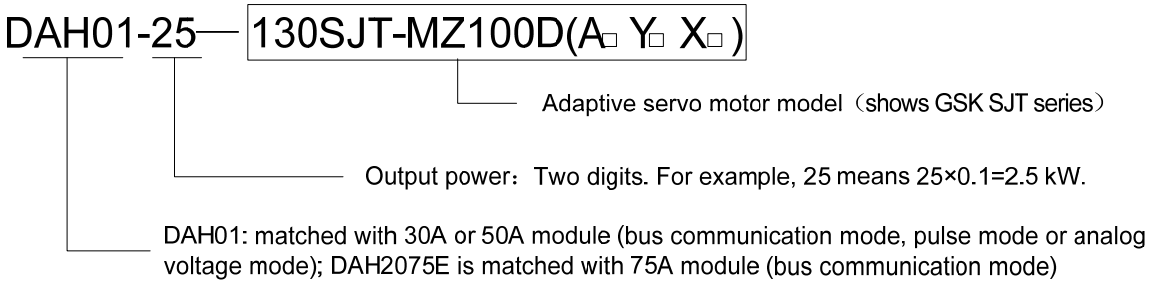

※**1**：Gsk servo motors with absolute encoders can be matched optionally by placing an order. The default parameters of AC servo drive units only match the servo motors of SJT series. **When other servo motors are used, the ex-factory parameter has been backuped in EEPROM area and can be recovered.** When restoring the factory parameters, execute Backup Restoration instead of Default Parameter Restoration.

※**2**：Medium and small power (≤1.5KW) is standard configuration, medium power (＞1.5W, ≤ 6KW) uses thickened radiator.

Order models of servo drive units matching SJT series servo motors with absolute encoders are as follows:

Order model (Only match the servo motors of GSK SJT series)	Servo motor model and specification	Remark
DAH01-05-80SJT-M024C(A4)	0.5kW, 2.4N.m, 2000 r/min, 3A, (30A module)	
DAH01-07-80SJT-M024E(A4)	0.75kW, 2.4N.m, 3000 r/min, 4.8A, (30A module)	
DAH01-06-80SJT-M032C(A4)	0.66kW, 3.2N.m ,2000 r/min, 5A, (30A module)	
DAH01-10-80SJT-M032E(A4)	1.0kW,3.2N.m, 3000 r/min, 6.2A, (30A module)	
DAH01-10-110SJT-M040D(A4)	1.0kW, 4N.m, 2500 r/min, 4.5A, (30A module)	
DAH01-15-110SJT-M060D(A4)	1.5 kW 6N.m, 2500 r/min, 7A, (30A module)	※
DAH01-10-130SJT-M040D(A4)	1.0 kW 4N.m, 2500 r/min, 4A, (30A module)	
DAH01-13-130SJT-M050D(A4)	1.3 kW 5N.m, 2500 r/min, 5A, (30A module)	
DAH01-15-130SJT-M060D(A4)	1.5 kW, 6N.m, 2500 r/min , 6A, (30A module)	
DAH01-20-130SJT-M075D(A4)	1.88 kW, 7.5N.m, 2500 r/min, 7.5A, (30A module)	※
DAH01-15-130SJT-M100B(A4)	1.5 kW, 10N.m 1500 r/min, 6A, (30A module)	
DAH01-25-130SJT-M100D(A4)	2.5 kW, 10N.m, 2500 r/min, 10A, (50A module)	※
DAH01-23-130SJT-M150B(A4)	2.3 kW, 15N.m, 1500 r/min, 8.5A, (30A module)	※
DAH01-39-130SJT-M150D(A4)	3.9 kW, 15N.m, 2500 r/min, 14.5A, (50A module)	※
DAH01-28-175SJT-M180B(A4)	2.8 kW, 18N.m, 1500 r/min, 15A, (50A module)	※
DAH01-38-175SJT-M180D(A4) DAH2075E-38-175SJT-M180D(A4)	3.8 kW, 18N.m, 2500 r/min, 16.5A, (75A module)	※※
DAH01-35-175SJT-M220B(A4) DAH2075E-35-175SJT-M220B(A4)	3.5 kW, 22N.m,1500 r/min, 17.5 A, (50A module)	※※
DAH01-45-175SJT-M220D(A4) DAH2075E -45-175SJT-M220D(A4)	4.5 kW, 22N.m,2500 r/min, 19 A, (75A module)	※※
DAH01-38-175SJT-M300B(A4) DAH2075E -38-175SJT-M300B(A4)	3.8 kW, 30N.m,1500 r/min, 19 A, (75A module)	※※
DAH01-60-175SJT-M300D(A4) DAH2075E -60-175SJT-M300D(A4)	6 kW, 30N.m,2500 r/min, 27.5 A, (75A module)	※※

5) Accessories

Order model	Standard accessories		Remark
	DAH2075E,DAH01 (bus communication interface mode)	**DAH01 (Pulse/analog command interface mode)**	
Driving device (drive units and motors)	(1) An instruction manual (this one) for DAH series AC servo drive unit. (2) RJ45S crystal head and network cable (3) 3m motor wire, 3m encoder feedback wire	(1) An instruction manua (this one) for DAH series AC servo drive unit. (2) One set of DB44 female plugs. (3) 3m motor wire, 3m encoder feedback wire.	The provided cables are welded.
Driving devices matching CNC (drive unit, motor and CNC)	(1) An instruction manual (this one) for DAH series AC servo drive unit. (2) RJ45S crystal head and network cable. (3) 3m motor wire, 3m encoder feedback wire	(1) An instruction manual (this one) for DAH series AC servo drive unit. (2) 3m motor wire, 3m encoder feedback wire. (3) 3m signal wire from CNC to drive unit.	

Note 1: Signal cable (standard 3m) can be provided when it is matched with our position controller.
Note 2: Users can select feedback cables (standard 3m) when our servo motors are provided.
Note 3: Standard accessories of servo motors are provided according to servo motor manual.

1.3 Product Appearance

1) DAH 2075E Servo Drive Unit

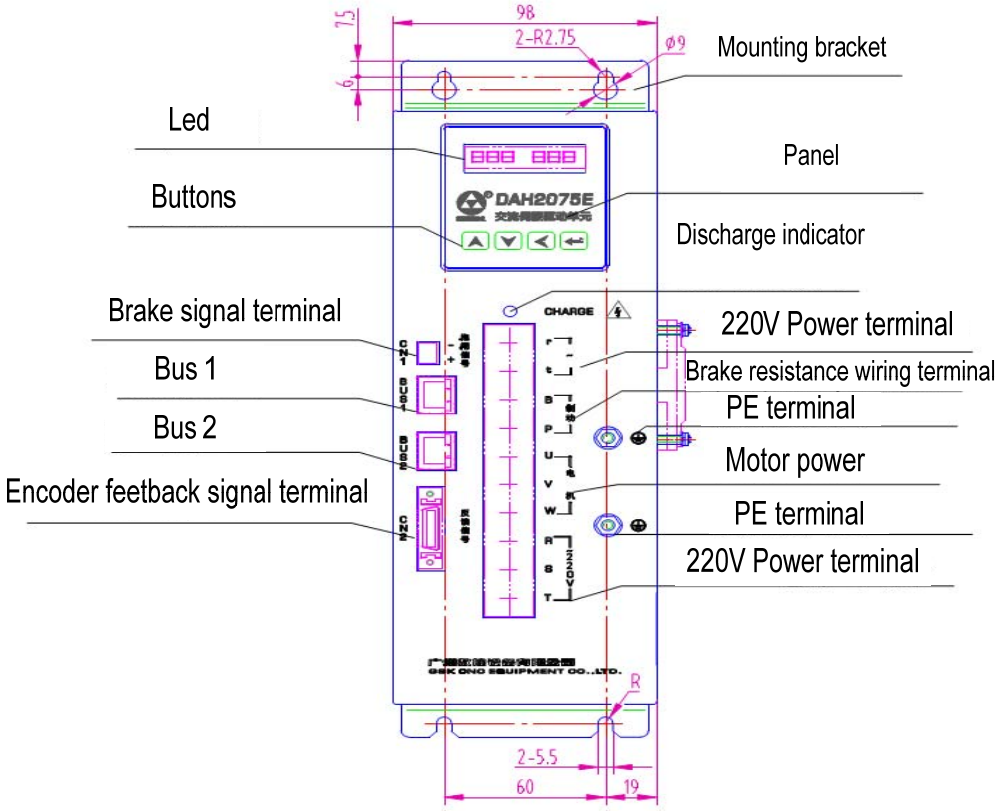

Fig. 1-2-1 DAH2075E (bus communication mode) Servo Drive Unit Appearance

2) Appearance of DAH01 Servo Drive Unit

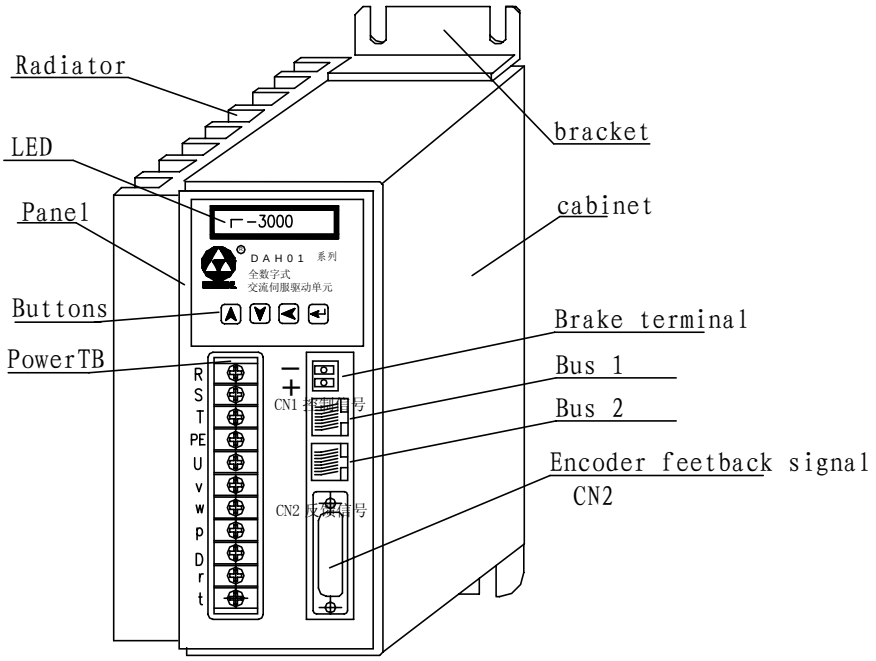

Fig. 1-3-2 Appearance of DAH01 (bus communication mode) Servo Drive Unit

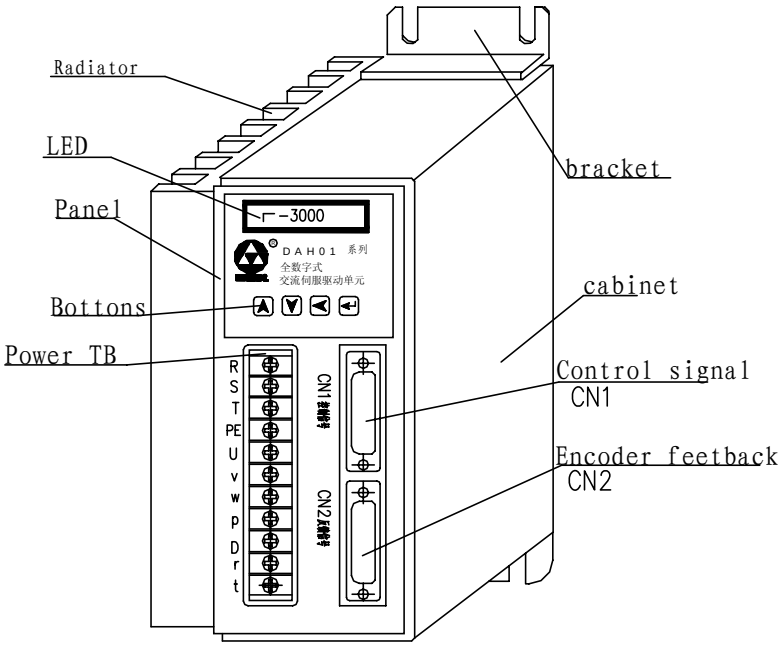

Fig. 1-3-3 Appearance of DAH01 (matched with DB44 female connector) Servo Drive Unit

2) Appearance of Servo Motor

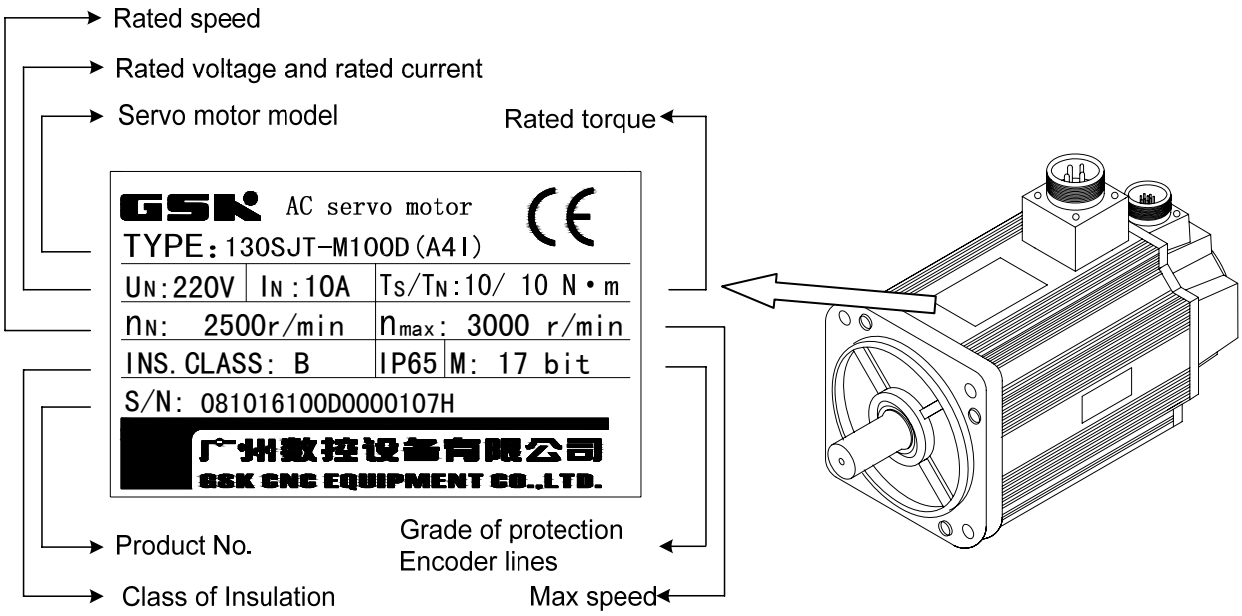

Fig. 1-3-4 Appearance of Servo Motor

CHAPTER 2 INSTALLATION

Note

- The product storage and installation must meet the requirements of ambient conditions.
- Do not pile up many products together to prevent them from falling or being damaged .
- Use original packaging to store and transit products.
- Damaged or incomplete products can not be installed.
- Use fire-resistance materials for product installation and do not install the product on or near flammable objects to prevent fire.
- The servo drive unit must be installed in electricity cabinet to prevent dust, corrosive air, conductive objects, liquid and flammable material from entering it.
- Avoid vibration and impact in the servo drive unit and motor.

2.1 Ambient Conditions

Item	Servo drive unit of DAH series	AC servo motor of GSK SJT series
Operation temperature/humidity	0℃～+40℃ (no frost) ＜90%RH (no dewing)	0℃～+40℃ （no frost） 90%RH 以下 (no dewing)
Storage temperature/humidity	-40℃～+70℃ 90%RH（no dewing）	-40℃～+70℃ ＜90%RH（no dewing）
Atmospheric environment	No corrosive air, flammable air, oil mist and dust in the control cabinet.	Indoor environment (no insolation): no corrosive air, flammable air, oil mist and dust.
Elevation	Elevation＜ 1000m	Elevation＜ 1000m
Vibration	＜0.5G（4.9m/s^2）10Hz～60Hz （non-continuous running）	
Protection grade	IP43	IP65

2.2 Installation for Servo Drive Unit

Note

- Install the servo drive unit in a protective electricity cabinet.
- Install the servo drive unit according to the specified direction and intervals and ensure good radiating conditions.
- Do not install the drive servo unit on or near flammable objects to prevent fire.

1） Installation environment

（1） Protection

The structure of the servo drive unit has no protection, so it must be installed into an electricity cabinet with good protection and kept away from corrosive and flammable air, conductive objects, metal dust, oil mist and liquid.

（2） Temperature and humidity

Environment temperature 0℃～+40℃, ensure good radiating conditions.

（3） Vibration and impact

Avoid vibration when installing the drive unit, vibration reducing measures should be taken to keep vibration under 0.5G(4.9m/s^2) , and drive unit should not bear weight and impact during its installation.

2） Installation Method

（1） Installation Dimension and Installation Method for DAH01

DAH01 can be installed with base-plate installation or panel installation, with its installation direction perpendicular to mounting surface. Figure 2-1 is the sketch map for base-plate installation; Figure 2-2 is the sketch map for panel installation.

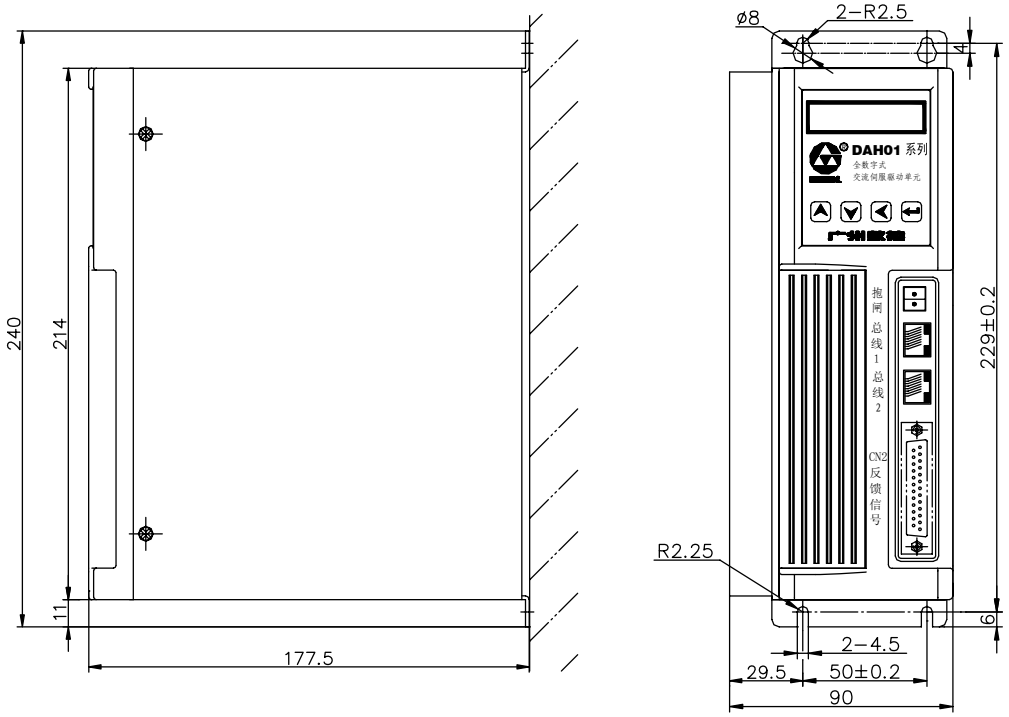

Fig. 2-1 Base-plate Installation Mode for Drive Unit

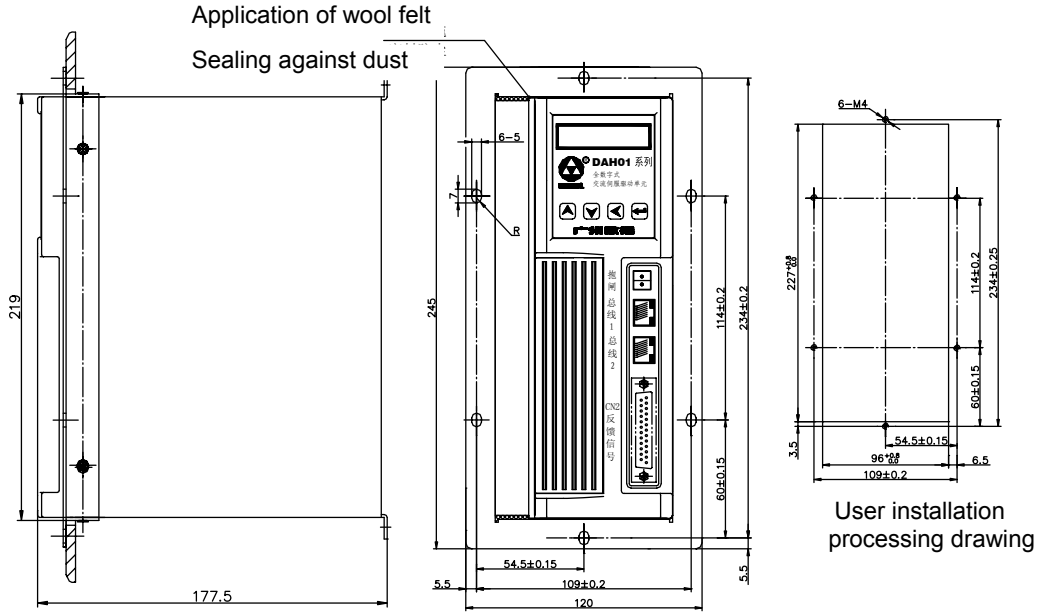

Fig. 2-2 Panel Installation Mode for Drive Unit

（2） DAH01 Installation Interval

Figure 2-3 shows installation intervals for a single drive unit, figure 2-4 shows installation intervals for multiple drive units, large space should be left for keeping good radiating conditions in the actual installation.

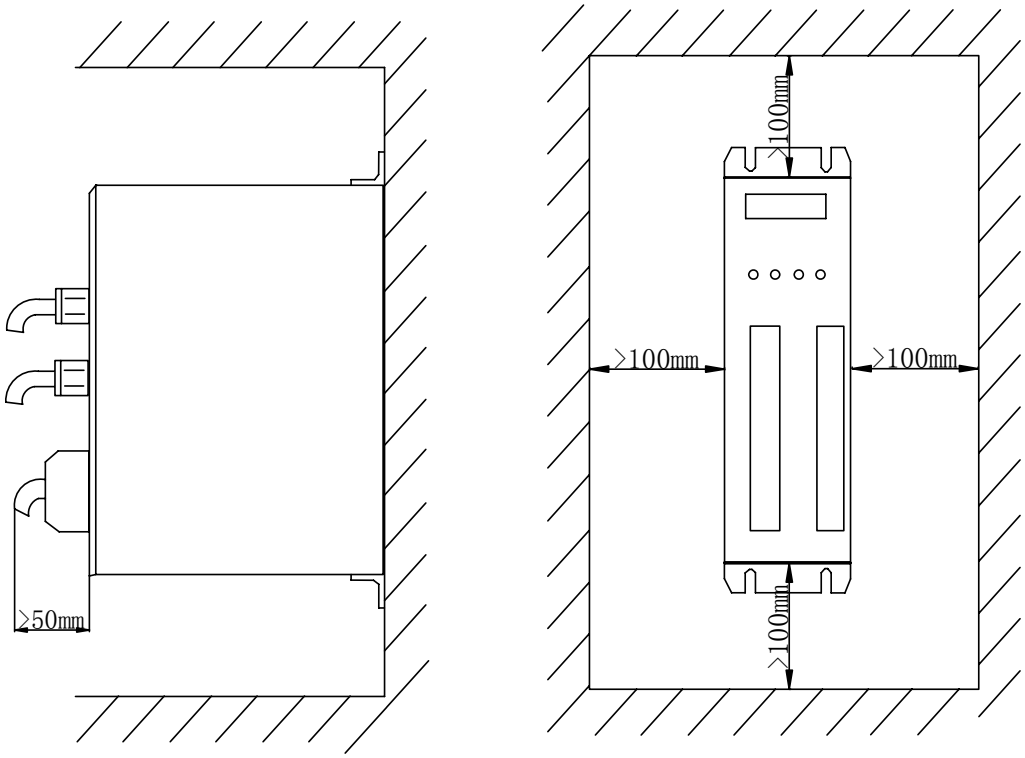

Fig. 2-3 Installation Intervals for a Single Drive Unit

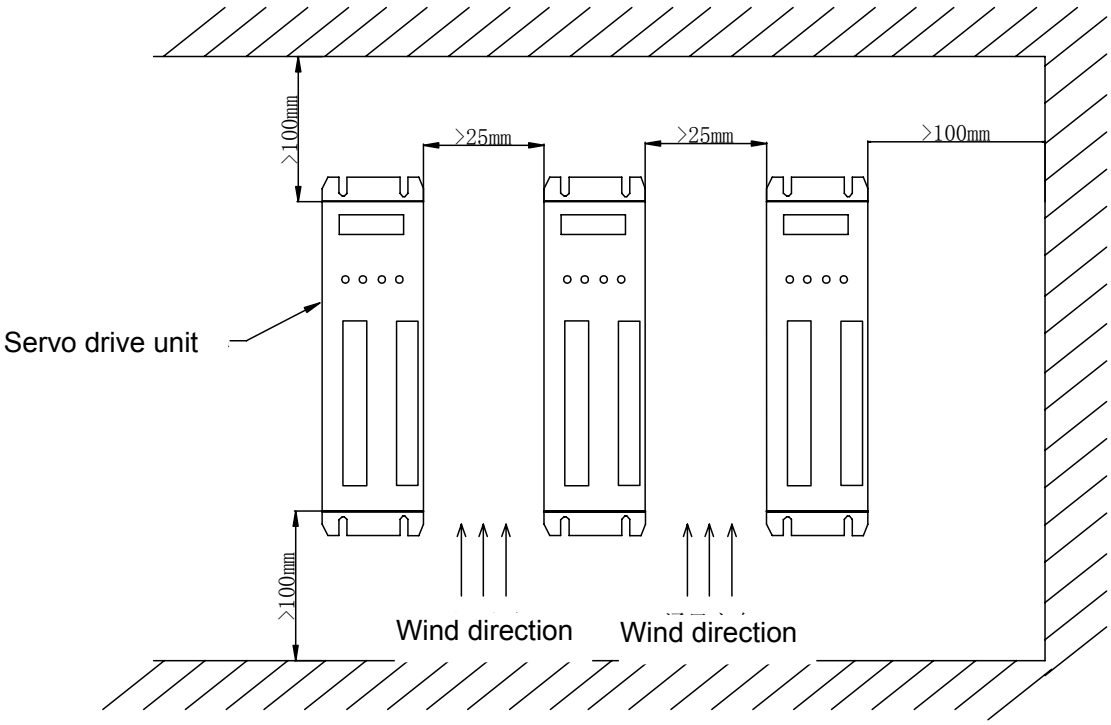

Figure 2-4 Installation Intervals for Multiple Drive Units

（3） Installation Dimension and Installation Method for DAH2075E

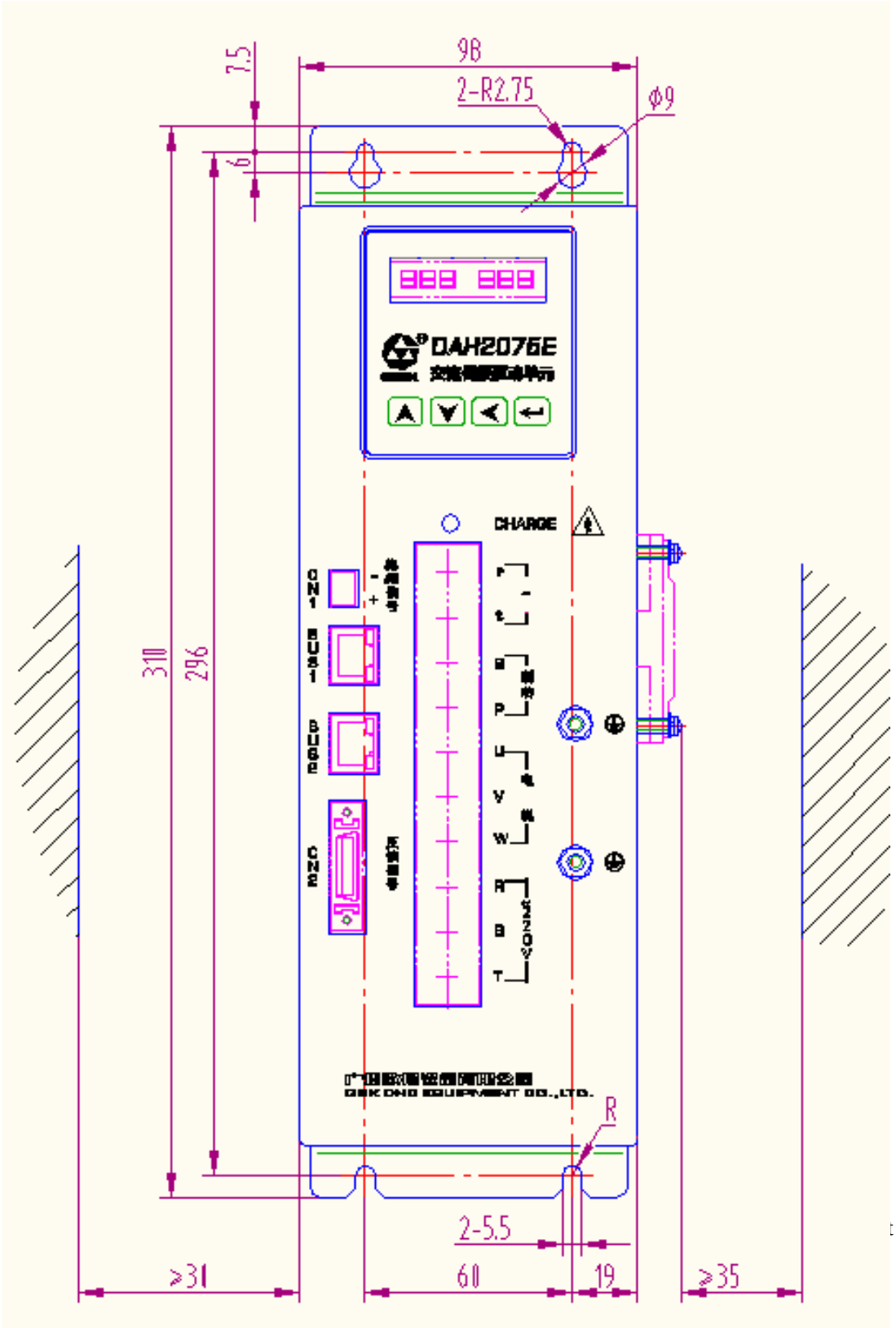

Fig. 2-5 Installation Dimension for DAH 2075 Drive Unit

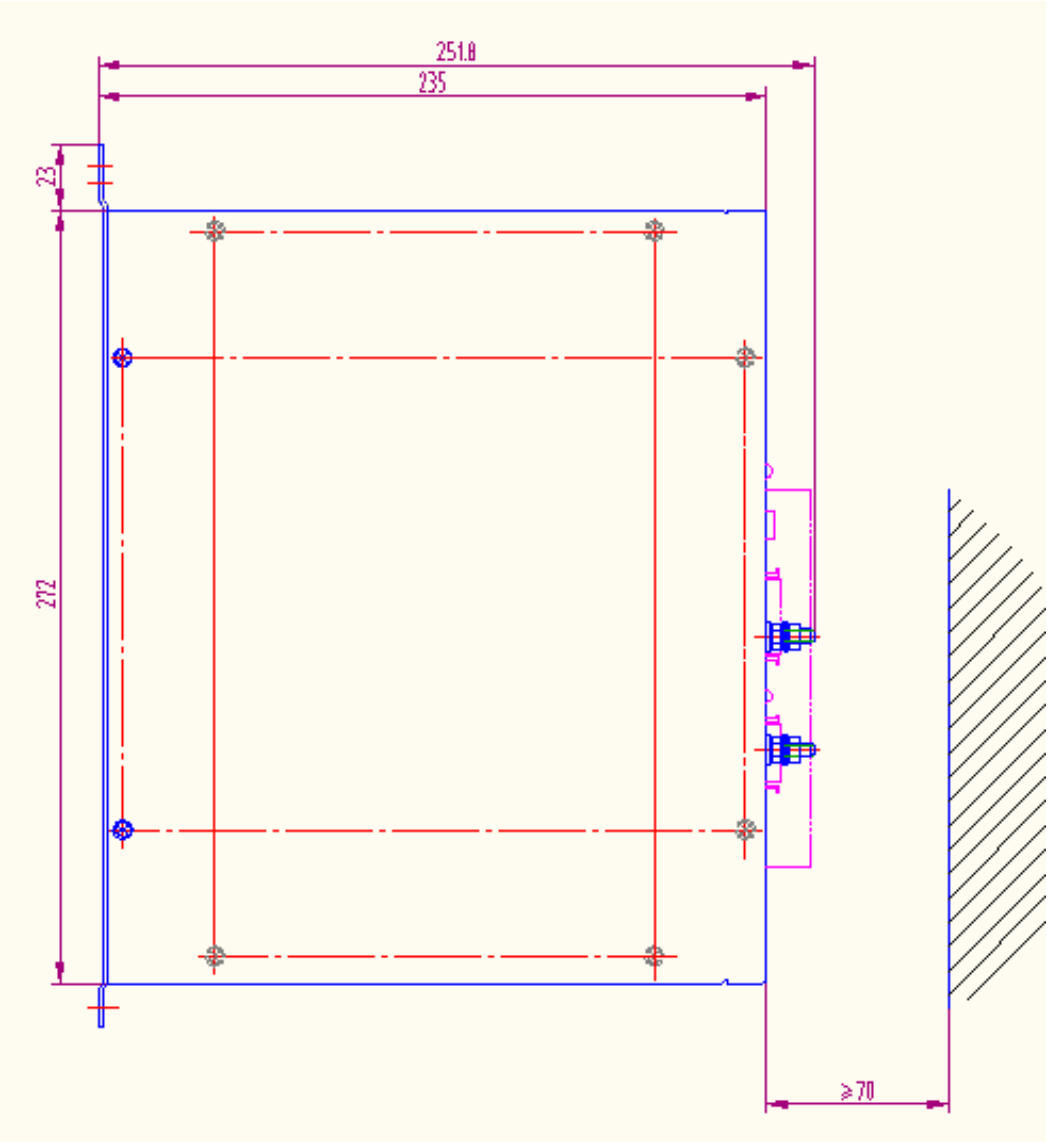

Fig. 2-6 Base-plate Installation Dimension and Intervals (Side) for DAH 2075 Drive Unit

3）Heat Dissipation

To prevent the ambient temperature of the servo unit from rising continuously, radiators blowing convection wind towards the unit should be installed in the electric cabinet.

2.3 Installation for Servo Motor

Note

- Striking the motor shaft or encoder is prohibited for protecting the motor from vibration and impact.
- Dragging the motor shaft, lead-in wires or encoder during handling is prohibited.
- Motor shaft overloading is not allowed, or else the motor may be damaged.
- Secure installation and anti-loosen measures for motor are required.

1）Installation Environment

（1）Protection

Prevent liquid from spraying to the motor and prevent oil and water from entering the motor through its lead-in wire and motor shaft, for the servo motors of GSK SJT series and Huazhong ST series are not water-proof.

Note: Please declare in your order if you need a water-proof motor.

（2）Temperature and Humidity

Keep the environment temperature between 0～+40℃. Motor temperature rises after long-term running, so forced air cooling should be taken when there are heating elements or small space around the motor.

Relative humidity should be less than 90%RH，with no dewing.

（3）Vibration

The servo motor should not be installed in the situation with vibration, and the vibration should be no more than 0.5G (4.9m/s^2)。

2）Installation Method

(1) Installation Method

SJT series motor adopts flange installation mode currently and its installation direction is arbitrary.

(2) Cautions:

- It is forbidden to strike the motor or motor shaft to prevent the encoder from being damaged when disassembling or assembling belt wheels.
- Most SJT series motors can not bear big axial and radial loads currently. It is suggested that elastic couplings be used to connect loads.
- Fix the motor with anti-loosened gaskets to prevent it from coming loose.

CHAPTER 3 CONNECTION

Caution

- **Only qualified persons can connect the system or check the connection**
- **Wiring and checking cannot be done in 5 minutes after the power supply is switched off to avoid electric shock.**
- **Wiring must be performed in terms of the terminal voltage and polarity to avoid equipment damage and personnel injury.**
- **The drive unit and servo motor must be grounded well.**

3.1 Standard Wiring

1） Ethernet Bus Mode

Figure 3-1-1 and figure 3-1-2 show the Ethernet bus standard wiring for DAH01 and DAH2075E respectively.

2） Position Control Mode (Pulse Mode)

Figure 3-1-3 shows the standard wiring for position control (pulse mode).

3) Speed Control Mode (Analog Voltage Mode)

Figure 3-1-4 shows the standard wiring for speed control (analog voltage mode).

4) Wiring

（1） Power Terminal TB

- Wire cross-sectional area: For terminals R、S、T、PE、U、V and W, cross-sectional area≥1.5mm^2(AWG14～16); for terminals r and t, cross-sectional area ≥1.0 mm^2(AWG16～18).
- Grounding: grounding wires should be as thick as possible. Drive unit shell, servo motor and system shell are earthed at one point of PE terminal. Earthing resistance ＜0.1Ω.
- Terminal connection adopts SVM2-4 pre-insulated cold-press terminals which must be connected securely.
- It is suggested that the power be supplied through a three-phase isolation transformer to reduce the possibility of electric shock.
- It is suggested that the power supply through connecting a noise filter to improve anti-interference capability.
- Please install a non-fuse breaker (NFB) to cut off the power in time when a fault occurs in the drive unit.

Control Signal CN1 and Feedback Signal CN2

- Wire selection: use screen cables (twisted ones are recommended), Cross-sectional area ≥0.12mm^2(AWG24～26)，shield layer must be connected to FG terminal.
- Wire length: wires should be as short as possible, the wire for controlling CN1 should not be longer than 3m, and feedback signal for controlling CN2 should not be longer than 20m.

- Wiring: wiring should be far from power circuit to prevent interference.
- Please install surge absorbing components for inductive components (coil): DC coil connects to the freewheel diode in parallel back to back while AC coil connects to the RC absorbing circuit in parallel.
- Bus interface connecting wire uses UTP- five categories (network cable) with both ends suppressed with crystal heads. Direct network cable and cross network cable can be suppressed.

Note

- U, V and W should be connected correspondingly but not reversely to motor windings.
- Cables and lead wires must be fixed well and not approach the motor and radiator of the drive unit to prevent insulation performance from being reduced by heat.
- There is large-capacity electrolytic capacitance in the drive unit. Even if the power is cut off, it will still retain high residual voltage. Do not touch the drive unit and motor in 5 minutes after power off.

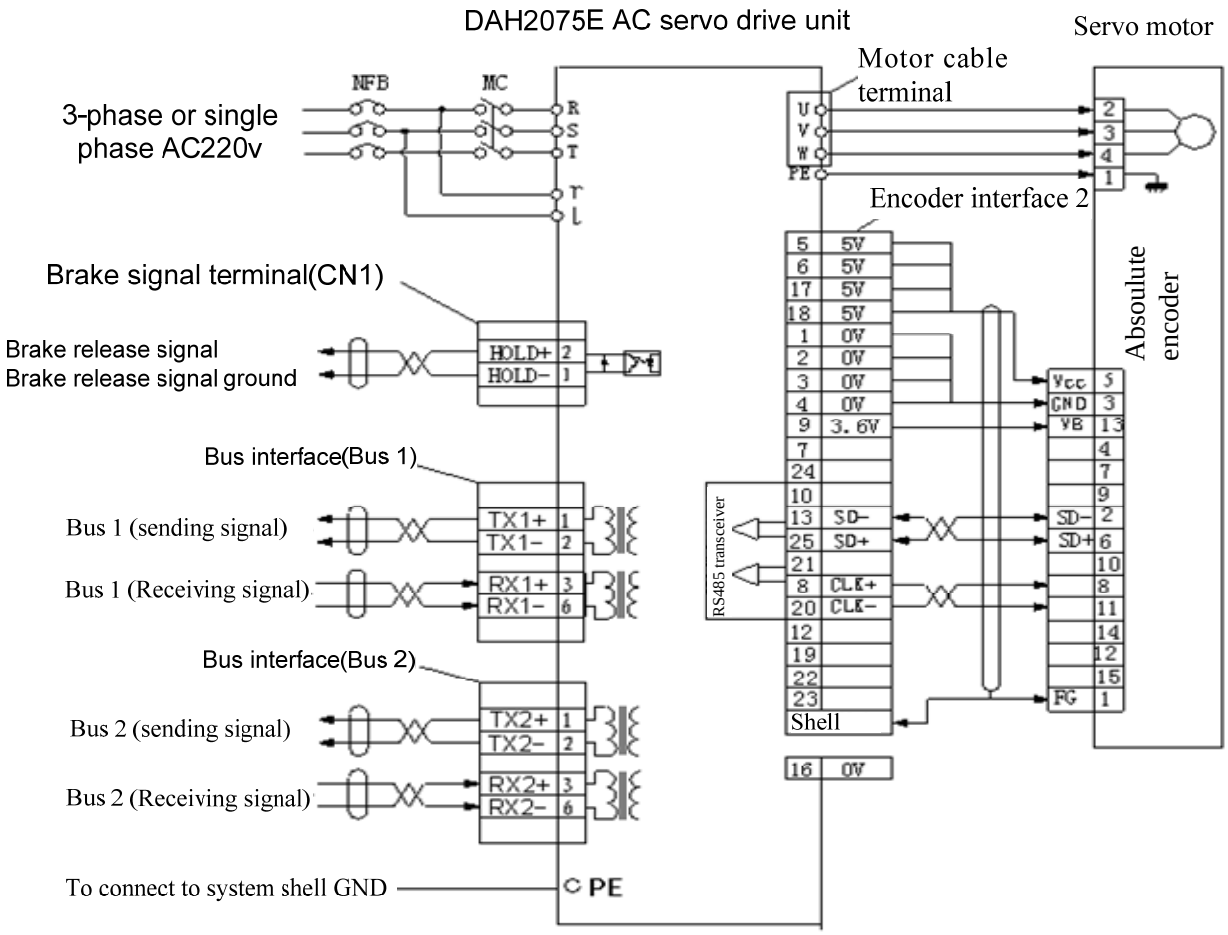

Fig. 3-1-1 Standard Connection for Ethernet Bus Mode of DAH2075E

Note: there must be good electrical connection between drive shell grounding and system shell grounding, or else unexpected results will occur.

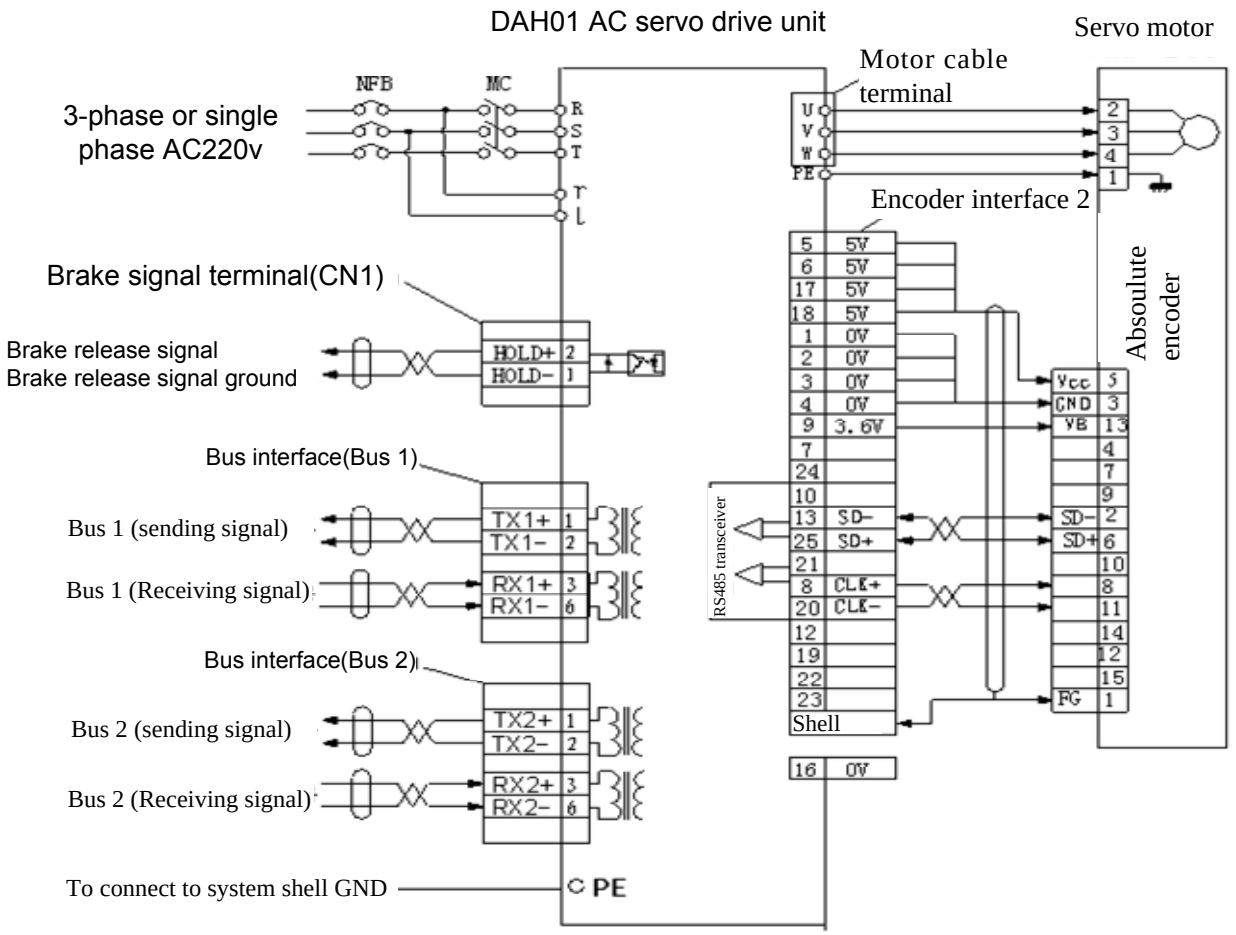

Fig. 3-1-2 Standard Connection for Ethernet Bus Mode of DAH01

Note: there must be good electrical connection between drive shell grounding and system shell grounding, or else unexpected results will occur.

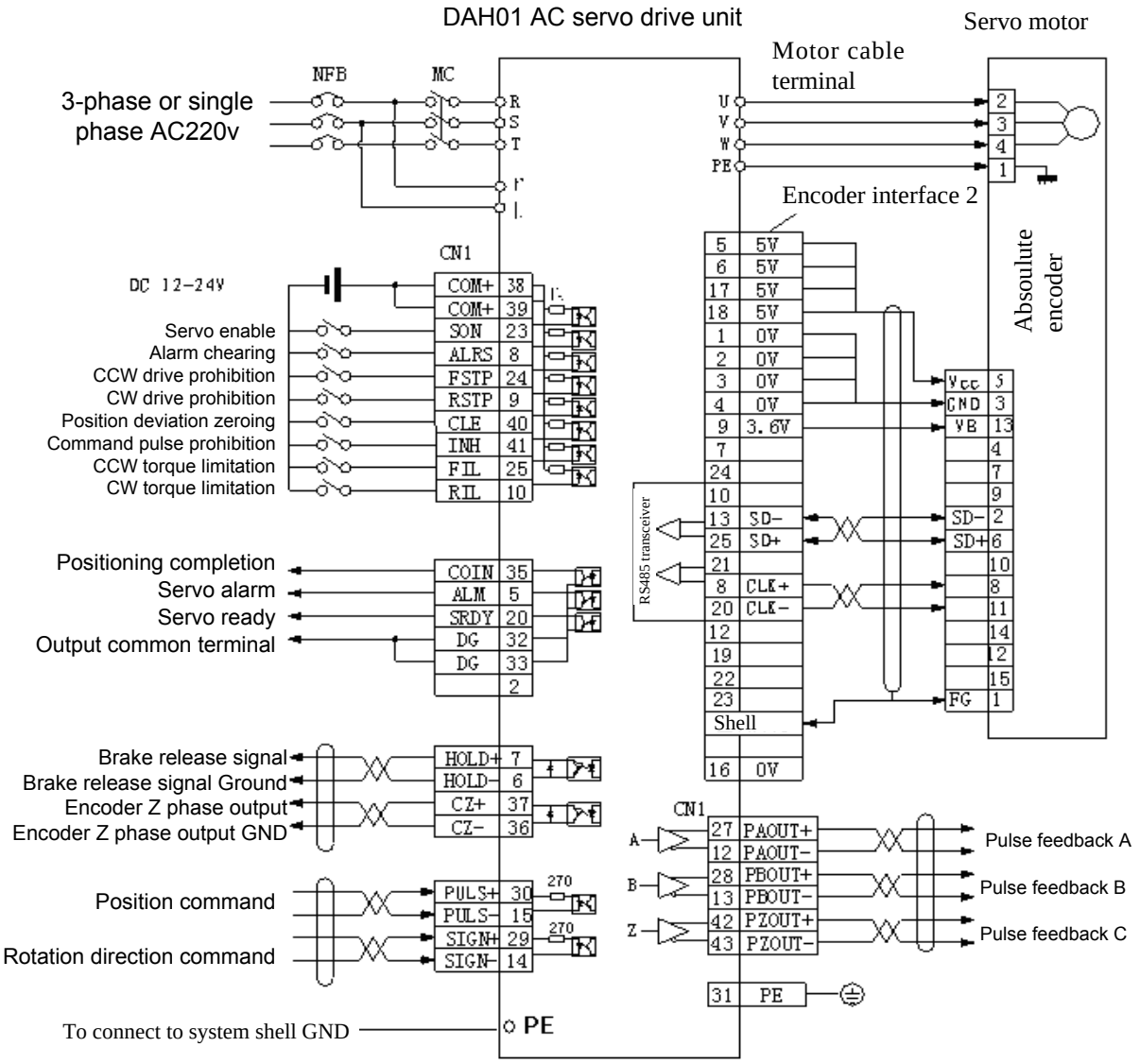

Fig. 3-1-3 Standard Connection for Position Control (pulse mode)

Note: there must be good electrical connection between drive shell grounding and system shell grounding, or else unexpected results will occur.

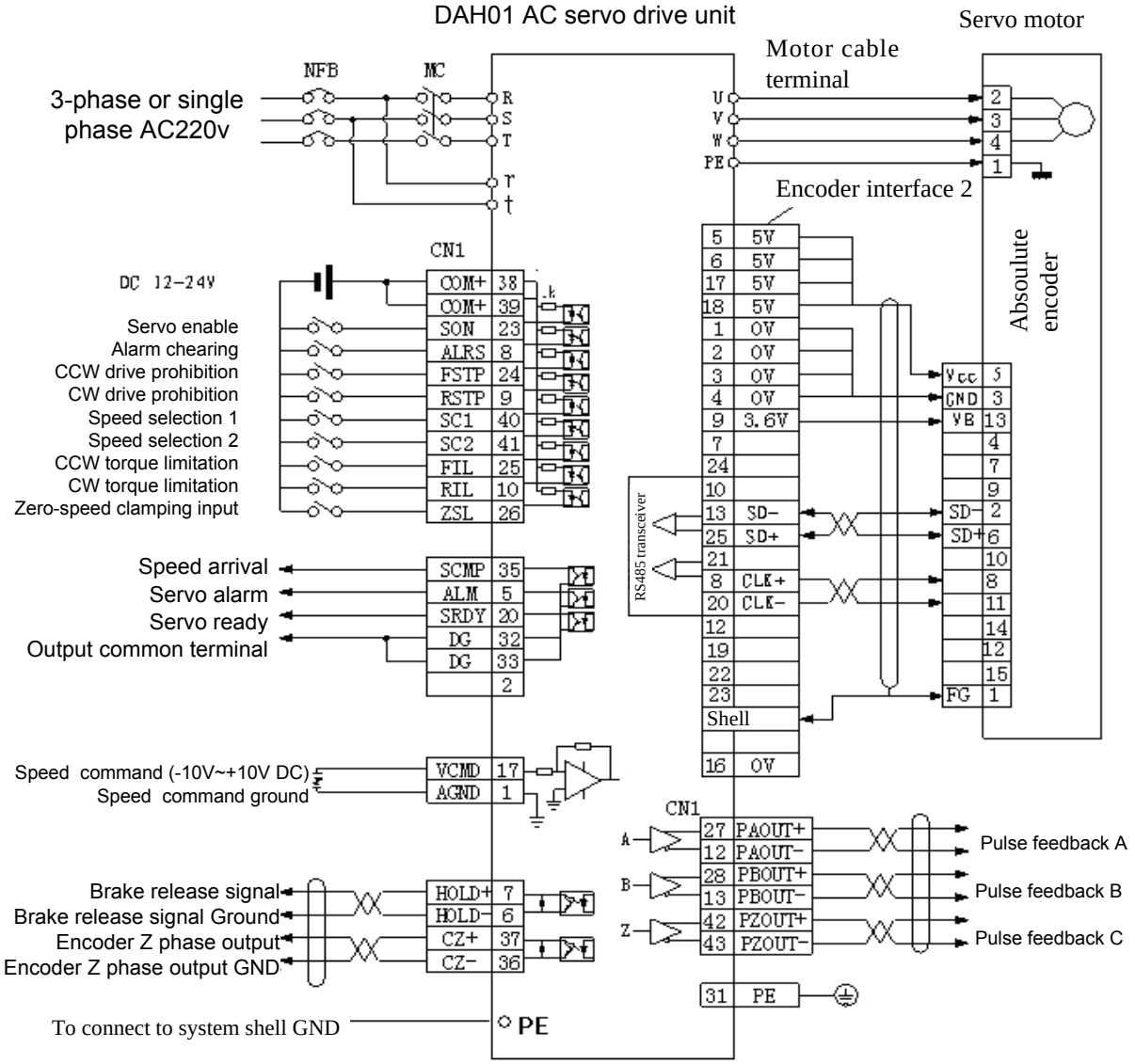

Figure 3-1-4 Standard Connection for DAH01 Speed Control (Analog Voltage Mode)

Note: there must be good electrical connection between drive shell grounding and system shell grounding, or else unexpected results will occur.

3.2 Terminal Function

3.2.1 Terminal Configuration for DAH01 (Ethernet Interface), DAH2075E Servo Drive Unit Interface

1) Terminal Configuration

In figure 3-2-1-1, BUS1 indicates bus interface 1, BUS2 indicates bus interface 2; in figure 3-2-1-2, CN2 indicates the connector of a 26-pin encoder.

Bus interface 1 (BUS 1)

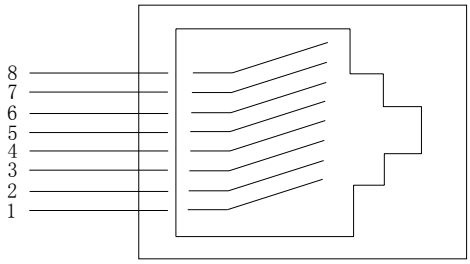

Bus interface 1 (BUS 1) pin explanation	
Pin number	Explanation
1	TX1+, white-green wire
2	TX1+, green wire
3	RR1+, orange-white wire
4	NC, blue wire
5	NC, blue wire
6	RX2-, orange wire
7	NC, brown-white wire
8	NC, brown wire

Bus interface 2 (BUS 2)

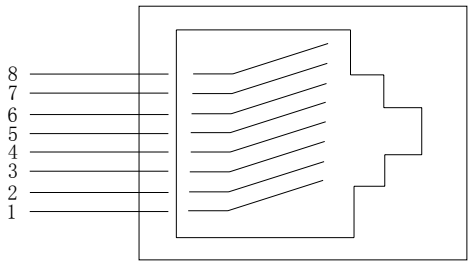

Bus interface 2 (BUS) pin explanation	
1	TX2+ white-green wire
2	TX2- green wire
3	RX2+, orange-white wire
4	NC, blue wire
5	NC, blue-white wire
6	RX2-, orange wire
7	NC, brown-white wire
8	NC, brown wire

Fig. 3-2-1-1 **Wiring for Bus Interface 1 and 2 of Servo Unit of DAH01 (Ethernet Interface) and DAH2075E**

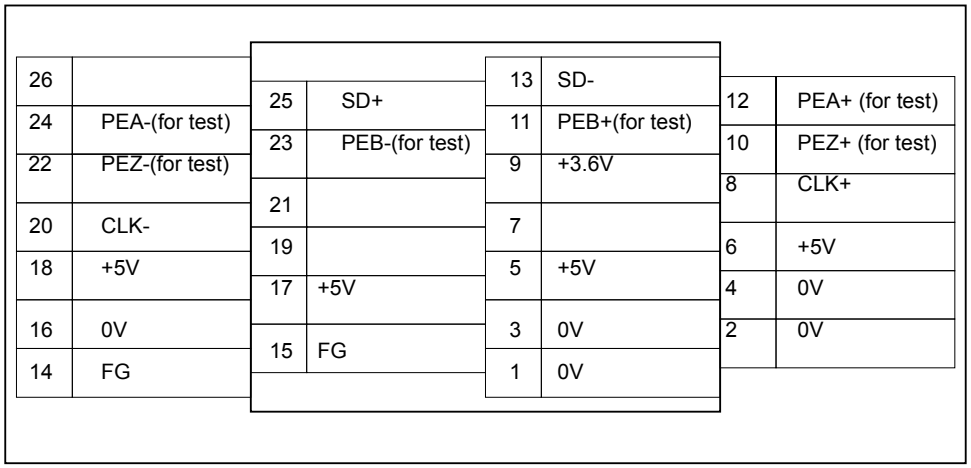

Type of CN2 Plug Connector: 10126-3000PE
Type of CN2 Shell Kit: 10326-52F0-008

Fig. 3-2-1-2 Wiring for Servo Unit Encoder Interface CN2 (26 Pins) of DAH01 (Ethernet Interface) and DAH2075E

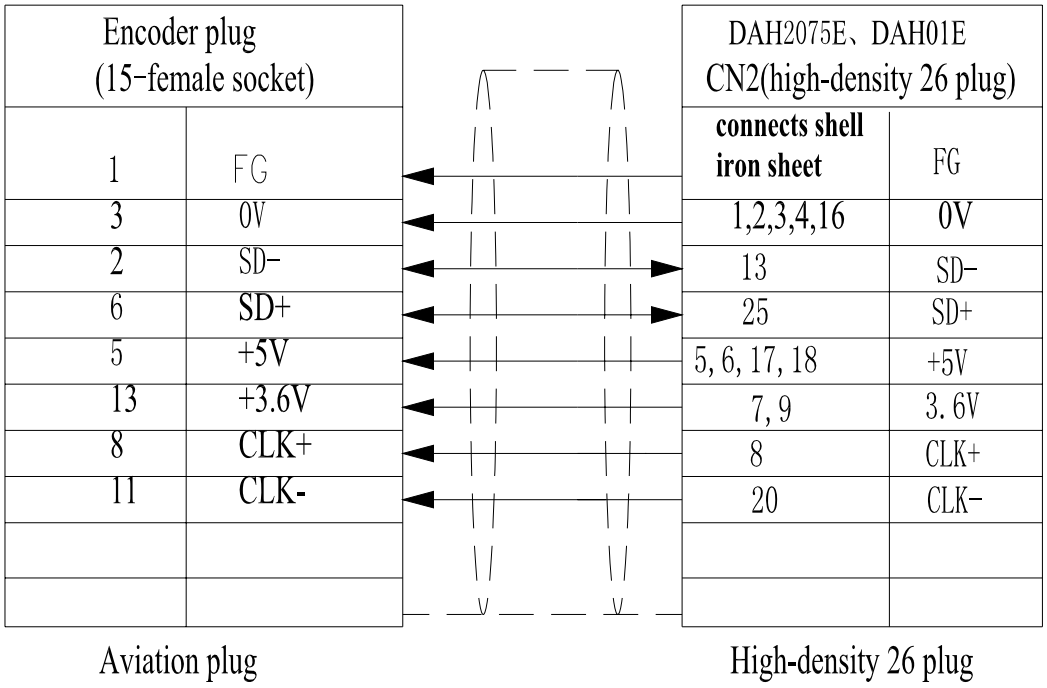

Fig. 3-2-1-3 Wiring for Encoder Interface CN2 (26 Pins) of Servo Unit of DAH01 (Ethernet Interface) and DAH2075E

Note: +5V and 0V power lines are respectively connected to the aviation plug with 4 and 5 wires combined together, 3.6 V power line is connected to the aviation plug with 2 wires combined together, pin 7 and pin 9 need to be shorted in high-density 26-pin plug in order to reduce the power voltage attenuation during long-distance cable transmission.

3.2.2 Terminal Configuration for Servo Drive Unit Interface of DAH01 (Pulse and Analog Command Mode)

1）Terminal Configuration

In figure 3-2-2-1, CN1 is a DB44 connector, with male socket and female plug; in figure 3-2-2-4, CN2 is a DB25 connector, with female socket and male plug.

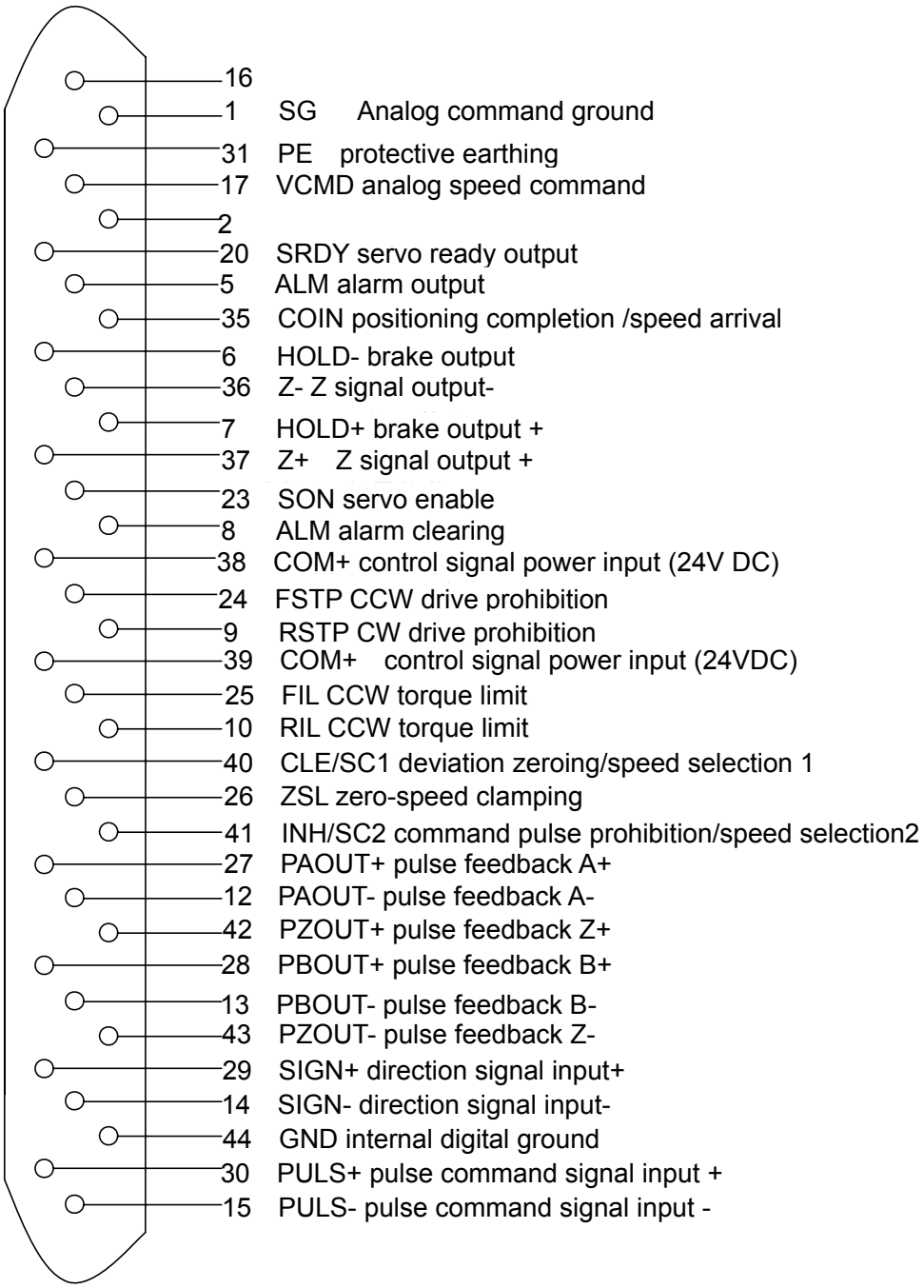

Fig. 3-2-2-1 Connection for Control Port CN1 (Pulse and Analog Command Mode) of DAH01

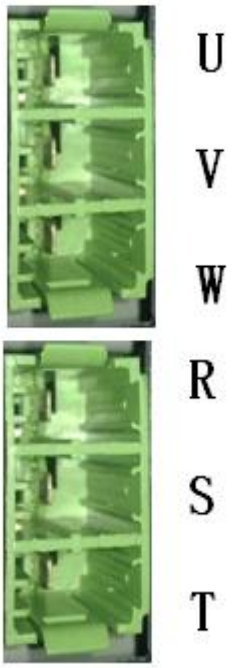

Fig. 3-2-2-2 Connection for DAH2075E Power Terminals

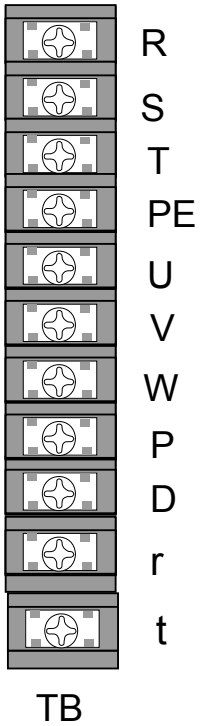

Fig. 3-2-2-3 Connection for DAH01 Power Terminals

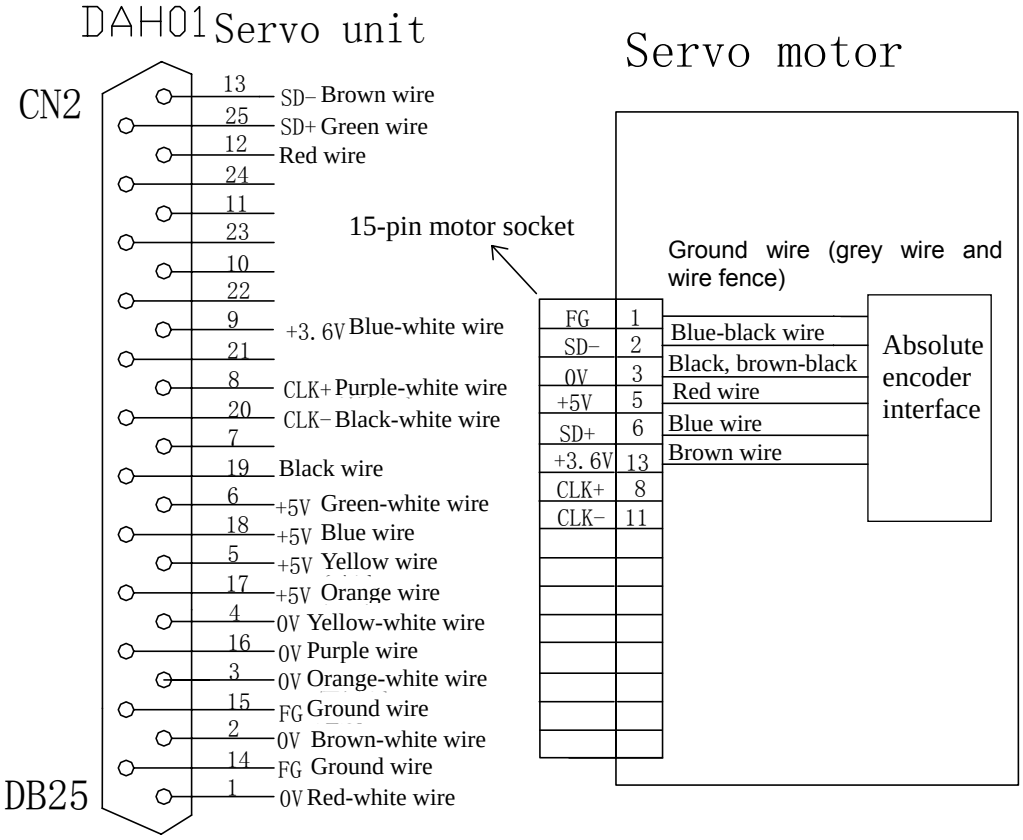

Fig. 3-2-2-4 Connection for Encoder Interface CN2 (25 pins) of Drive Unit of DAH01

2）DAH01 Drive Unit Power Terminal TB

Table 3-1 Power Terminal TB

Terminal number	Terminal mark	Signal name	Function
TB-1	R	Single-phase or three-phase major loop power	Major loop power input terminal AC220V 50Hz **Note: do not connect it to motor output terminals U,V and W.**
TB-2	S		
TB-3	T		
TB-4	PE	System grounding	grounding terminal grounding resistance＜0.1Ω; The servo motor output and power input are grounded at a common point.
TB-5	U	Servo motor output	The servo motor output terminal must be connected to motor terminals U, V and W correspondingly.
TB-6	V		
TB-7	W		
TB-8	P	reserved	
TB-9	D	reserved	
TB-10	r	single-phase control power supply	Control loop power input terminal AC 220V 50Hz
TB-11	t		

3）DAH01 Drive Unit Control Terminal CN1

Control mode abbreviation: P for position control mode
S for speed control mode

Table 3-2 control signal input/output terminal CN1

Terminal number	**Terminal name**	**Mark**	**I/O**	**Mode**	**Function**
CN1-38 CN1-39	Power supply positive pole of input terminal	COM+	Type1		The positive pole of the input terminal is used to drive the photoelectric coupler of the input terminal. DC12 V～24V，current≥100mA
CN1-23	Servo enable	SON	Type1		Servo enable input terminal SON ON：to enable the operation of the drive unit SON OFF：The drive unit is turned off and stops working, the motor is in free state. **Note 1: before SON OFF is switched to SON ON, the motor must be in the state of rest.** **Note 2: after switching to SON ON, do nto input commands until 50ms is waited.**

CN1-8	Alarm clearance	ALRS	Type1		Alarm clearance input terminal ALRS ON：clear system alarm ALRS OFF：keep system alarm **Note: this method is not available to clear those alarms with fault codes above 8. In this case, turn off the power and overhaul the drive unit, then turn on the power again.**
CN1-24	CCW drive prohibition	FSTP	Type1		CCW (counter clockwise) drive prohibition input terminal FSTP ON：CCW drive enable FSTP OFF：CCW drive prohibition **Note 1: used for mechanical ultra limit. When the switch is OFF, the CCW torque remains unchanged at 0.** **Note 2: setting parameter No. 20 can shield this function or make the switch always ON.**
CN1-9	CW drive prohibition	RSTP	Type1		CW (clockwise) drive prohibition input terminal RSTP ON：CW drive enable RSTP OFF：CW drive prohibition **Note 1: used for mechanical ultra limit. When the switch is OFF, the CW torque remains unchanged at 0.** **Note 2: setting parameter No. 20 can shield this function or make the switch always ON.**
CN1-40	Deviation counter zeroing	CLE	Type1	P	The input terminal of the position deviation counter zeroing CLE ON: position deviation counter zeroing during position control
	Speed selection 1	SC1	Type1	S	Speed selection 1 input terminal In speed control mode, the combination of SC1 and SC2 is used to choose different kinds of internal speed. SC1 OFF，SC2 OFF：internal speed 1 SC1 ON，SC2 OFF：internal speed 2 SC1 OFF，SC2 ON：internal speed 3 SC1 ON，SC2 ON：internal speed 4 **Note: values 1～4 of internal speed can be modified with parameters.**

Continued:

CN1-41	Command pulse prohibition	INH	Type1	P	Position command pulse prohibition input terminal INH ON：command pulse input prohibition INH OFF：command pulse input enabled
	Speed selection 2	SC2	Type1	S	Speed selection 2 input terminal In speed control mode, the combination of SC1 and SC2 is used to choose different kinds of internal speed. SC1 OFF，SC2 OFF：internal speed 1 SC1 ON：SC2 OFF：internal speed 2 SC1 OFF，SC2 ON：internal speed 3 SC1 ON，SC2 ON：internal speed 4
CN1-25	CCW torque limit	FIL	Type1		CCW (counter clockwise) torque limitation input terminal FIL ON：CCW torque limitation is within the range of parameter No.36. FIL OFF：CCW torque limitation is not restricted by parameter No. 36. **Note: whether FIL is valid or invalid, CCW torque is restricted by parameter No. 34. In general, parameter No.34>parameter No.36**
CN1-10	CW torque limitation	RIL	Type1		CW (clockwise) torque limitation input terminal RIL ON：CW torque limitation is within the range of parameter No. 37. RIL OFF：CW torque limitation is not restricted by parameter No. 37. **Note: whether RIL is valid or invalid, CW torque is restricted by parameter No. 35.**
CN1-20	Servo ready output	SRDY	Type2		Servo ready output terminal SRDY ON：The control power and the main power are normal, the drive unit does not alarm, and the servo ready output is ON. SRDY OFF：The main power is not switched on or an alarm occurs in the drive unit, the servo ready output is OFF.
CN1-5	Servo alarm output	ALM	Type2		Servo alarm output terminal ALM ON：The servo drive unit does not alarm, servo alarm output is ON. ALM OFF：An alarm occurs in the servo drive unit, the servo alarm output is OFF.

Continued:

CN1-35	Positioning completion output	COIN	Type2	P	Positioning completion output terminal COIN ON：When the value of the position deviation counter is within the range of the specified positioning, positioning completion output is ON.
	Speed arrival output	SCMP	Type2	S	Speed arrival output terminal SCMP ON：When the speed reaches or exceeds the setting speed, the speed arrival output is ON.
CN1-32 CN1-33	Common terminal of output terminal	DG	Common terminal		Common terminal of grounding wire for control signal output terminal (except CZ)
CN1-37	Encoder phase Z output	CZ	Type2		Encoder phase Z output terminal Photoelectric encoder phase Z pulse output of the servo motor CZ ON: Phase Z signal appears
CN1-26	Zero-speed clamping	ZSL	Type1		ZSL ON：The servo drive unit is beyond the control of analog voltage and outputs zero speed. ZSL OFF：The servo drive unit is under the control of the analog voltage.
CN1-36		CZCOM			The common terminal of Z-phase output terminal of the encoder
CN1-30	Command pulse PLUS input	PULS+	Type3	P	External command pulse input terminal **Note: the pulse input mode is set by parameter PA14.** (1) Command pulse+ sign mode; (2) CCW/CW command pulse mode;
CN1-15		PULS-			
CN1-29	Command pulse SIGN input	SIGN+	Type3	P	
CN1-14		SIGN-			
CN1-31	shielding ground wire	FG			Shielding ground wire terminal
CN1-2 CN1-16	analog ground	AGND		S	analog ground
CN1-17	Input analog command	VCMD	Type4	S	Input analog command ±10V Input impedance 20kΩ
CN1-1	Input analog command ground	SG		S	

Continued:

CN1-7	Brake output positive terminal	HOLD+	Type2	S/P	When the drain electrode open circuit output works normally, the photoelectric coupler conducts and the output is ON. When an alarm occurs, the photoelectric coupler is cut off and the output is OFF.
CN1-6	Break output negative terminal	HOLD-		S/P	
CN1-27	Encoder pulse A+	PAOUT+	Type5	S	Encoder feedback output signal, standard is 2500/line. The desired pulse number may be output by adjusting PA41 (output pulse number parameter), e.g., if requiring the encoder to output 15000 pulses per revolution, let PA41=15000, then the signals of phase A and phase B which are output from the drive unit side are 15000 pulses/revolution.
CN1-12	Encoder pulse A-	PAOUT-		S	
CN1-28	Encoder pulse B+	PBOUT+			
CN1-13	Encoder pulse B-	PBOUT-			
CN1-42	Encoder pulse Z+	PZOUT+			Motor outputs one pulse per revolution
CN1-43	Encoder pulse Z-	PZOUT-			

4） Feedback Signal Terminal CN2

Table 3-3 Encoder Signal Input/Output Terminal CN2

Terminal number	Signal name	Terminal mark			Color	Function
		Mark	I/O	Mode		
CN2-5 CN2-6 CN2-17 CN2-18	Power output +	+5V				The servo motor absolute encoder uses ＋5V power; When its cable is long, multiple core wires should be used in parallel connection mode.
CN2-1 CN2-2 CN2-3 CN2-4 CN2-16	Power output -	OV				
CN2-7 CN2-8 CN2-9	Battery output +	+3.6V				The servo motor absolute encoder uses ＋3.6V power to retain multiple-revolution data; When its cable is long, it should use multiple core wires connected in parallel. When the servo unit is not powered for a long time, the multiple-revolution data will be lost because of low battery.
CN2-13	Encoder SD-input	SD－	Type6			Be connected to the absolute encoder SD- of the servo motor

CN2-25	Encoder SD + input	SD＋				Be connected to the absolute encoder SD+ of the servo motor
CN2-14 CN2-15	Shielding ground wire	FG				Shielding ground wire terminal
CN2-20	for function extension	CLK-				For function Extension
CN2-8	For function Extension	CLK+				For function Extension

3.3 GSK-LINK Bus Communication Principle

GSK-LINK adopts an Ethernet physical layer chip and uses UTP-five categories as its transmission medium. Cyclic data can only be transferred between master station and servo slave station while non-cyclic data can be transferred within any stations. GSK-LINK adopts double-loop topological structure, and the bus topology is shown as figure 3-3-1. The communication module structure of a master station is the same as that of a slave station.

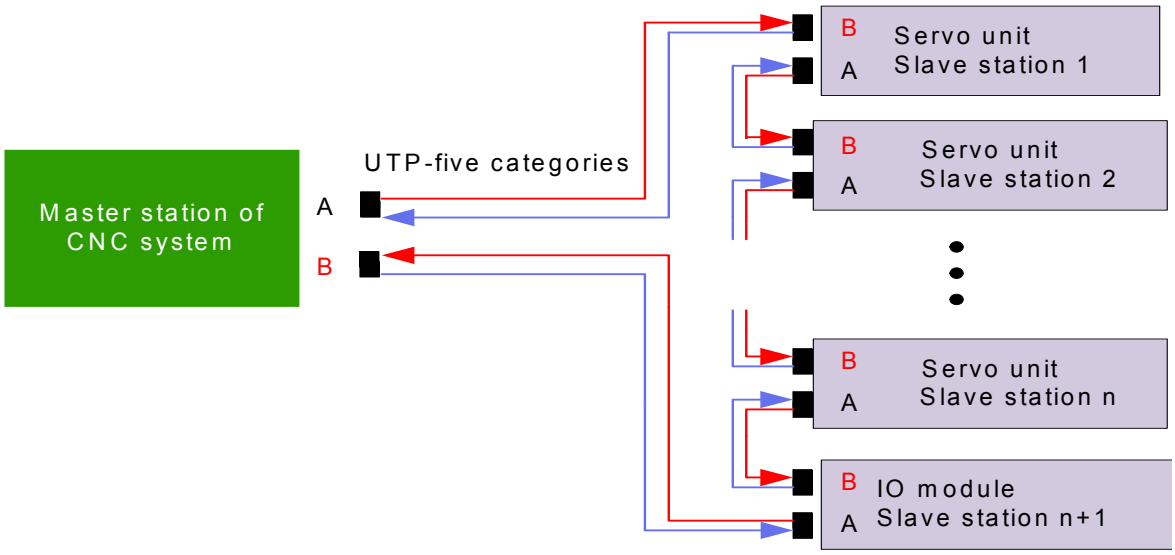

Fig. 3-3-1 Topology Structure of GSK-Link

3.4 I/O Interface Principle

1） Switch Value Input Interface

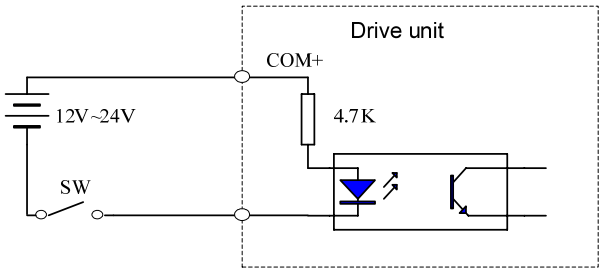

Fig. 3-4-1 Type1 Switch Value Input Interface

Note

- **The power supply is provided by users, DC12～24V, current≥100Ma**
- **If the polarity of current is reversed, the servo drive uint can not work.**

2） Switch Value Output Interface

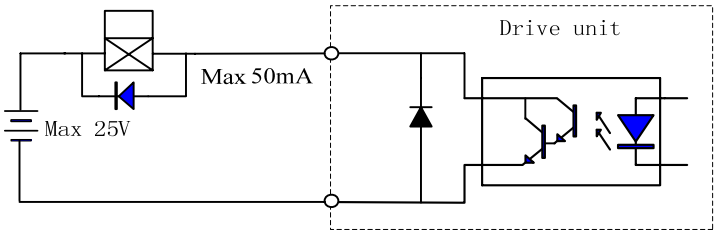

Fig.3-4-2 Type2 Switch Output Interface

Note

- **External power supply is provided by users. Please note that if the polarity of power is reserved, the servo drive will be damaged.**
- **The output is in collector open circuit form. The max. current is 50mA and the max. voltage of the external power supply is 25V. Therefore, the load of the switch output signal must meet this limited requirement. If the load exceeds the limited requirement or the output is directly connected to the power supply, the servo drive unit will be damaged.**
- **If the load is inductive such as a relay, the freewheeling diode must be connected in antiparallel in Its both ends. If the freewheeling diode is reversely connected, the servo drive unit may be damaged.**

3） Analog Value Input Interface

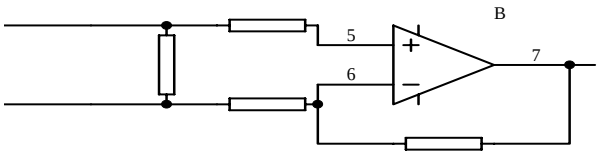

Fig.3-4-3 Type4 Analog Command Input Interface

Note

- **The input signal adopts twisted double cables for connection.**
- **The circuit is differential mode amplication type and the input impedance is 20K.**

4） Pulse Value Input Interface

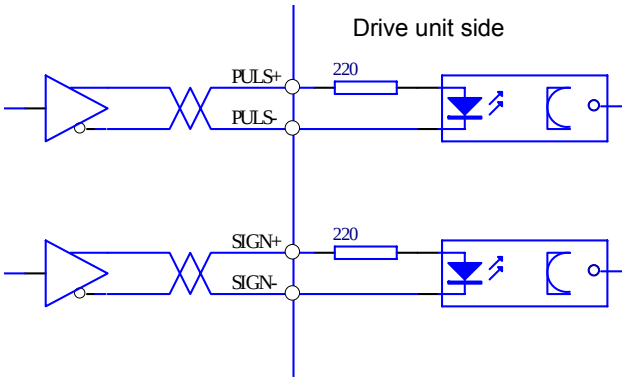

Fig. 3-4-4 Differential Drive Mode for Pulse Amount Input Interface

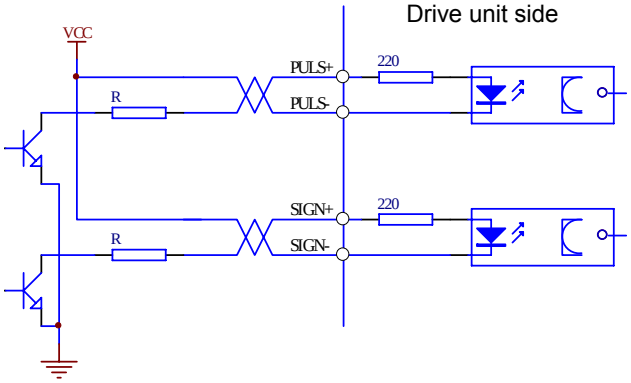

Fig. 3-4-5 Type4 Single-ended Drive Mode for Pulse Amount Input Interface

- **It is suggested to adopt differential drive mode in order to transfer the data of pulse amount correctly.**
- **Adopt AM26LS31, MC3487 or similar RS422 line drive units in the differential drive mode.**
- **The adoption of the single-ended drive mode may reduce the dynamic frequency. Determine the value of resistance R under the conditions of 10mA～15mA of current and 25V of max. voltage of the external power in the pulse input circuit. Empirical data:**
  Vcc=24V，R=1.3kΩ～2kΩ；Vcc=12V，R=510Ω～820Ω；Vcc=5V，R=82Ω～120Ω。
- **The external power supply is provided by users in the single-ended drive mode. It must be noted that the servo drive unit will be damaged if the power polarity is reversed.**
- **Refer to table 3-4 for the pulse input form. The arrow in it indicates the counting edge. Table 3-5 shows the pulse input time sequence parameter.**

Table 3-4-1 Pulse input form

Pulse command form	CCW	CW	Parameter setting value
Pulse train sign	PULS SIGN		0 Command + direction
CCW pulse train CW pulse train	PULS SIGN		1 CCW pulse /CW pulse

Table 3-4-2 Pulse input time sequence parameter

Parameter	Differential drive input	Single-ended drive input
t_{ck}	>0.152μs	>0.381μs
t_h	>0.0763μs	>0.191μs
t_l	>0.0763μs	>0.191μs
t_{rh}	<0.0152μs	<0.0228μs
t_{rl}	<0.0152μs	<0.0228μs
t_s	>0.0763μs	>0.191μs
t_{qck}	>0.608μs	>0.76μs
t_{qh}	>0.304μs	>0.382μs
t_{ql}	>0.304μs	>0.382μs
t_{qrh}	<0.0152μs	<0.0228μs
t_{qrl}	<0.0152μs	<0.0228μs
t_{qs}	>0.0763μs	>0.191μs

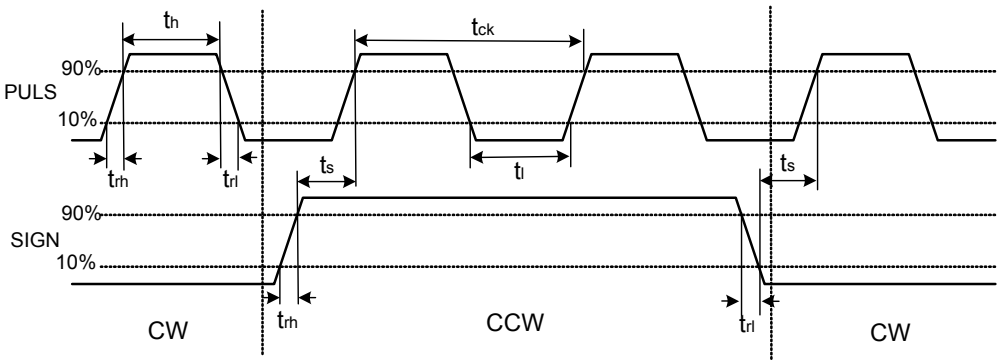

Fig. 3-4-6 Time sequence for pulse+sign input interface (max. pulse frequency: 6.5536MHz)

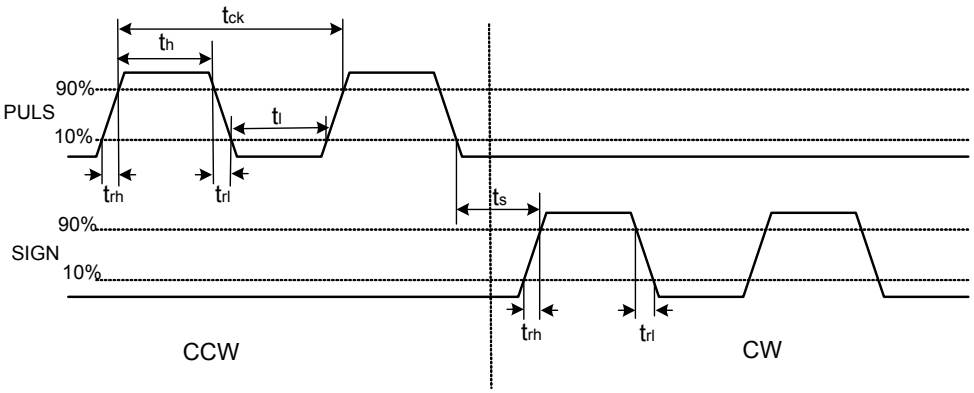

Fig. 3-4-7 Time sequence for CCW/CW pulse input interface (max. pulse frequency: 6.5536MHz)

5） Output interface for drive unit speed signal

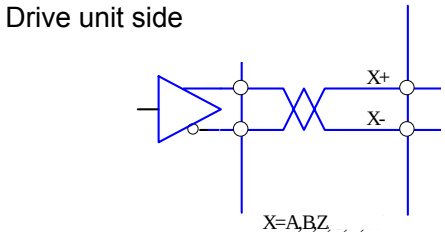

Fig. 3-4-8 Type5 speed signal output of drive unit

6） Input interface for servo motor absolute encoder

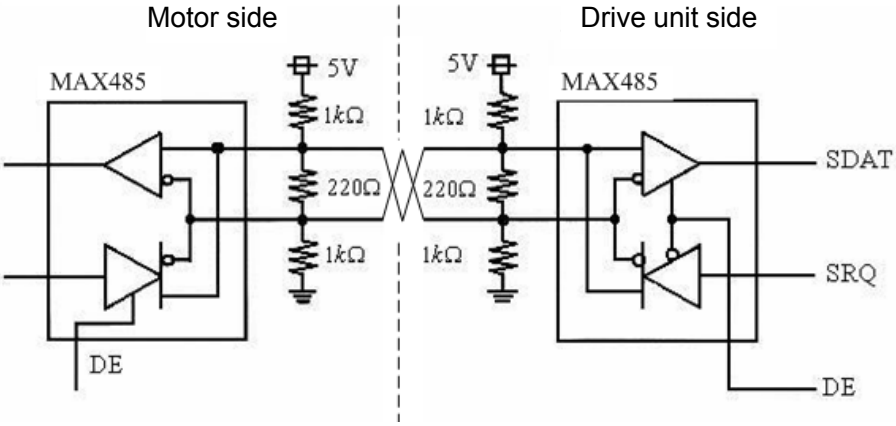

Fig. 3-4-9 Type6 Input interface of servo motor absolute encoder

CHAPTER 4 PARAMETER

Note

- Please fully understand the meaning of the parameters before parameter adjustment, for incorrect setting may cause equipment damage and injury.
- Adjust the parameters when the servomotor runs in no load mode.
- The motor parameters match those servo motors with absolute encoders of GSK SJT series by default. If using other servo motors, adjust corresponding parameters, otherwise the motor may not work normally.

4.1 Parameter List

- The factory value in the following table is an example for the drive units matched with GSK 130SJT-M075D(A4) motors （7.5N.m、3000r/min）. Corresponding parameters vary with various motors.
- Software version: V3.48
- P: position control S: speed control Ⅰ: drive unit pulse/analog command interface Ⅱ: drive unit bus mode interface.

Table 4-1 parameter list

No.	Description	Application	Parameter range	Factory value	Unit	Drive unit interface type	
						Ⅰ	Ⅱ
0	password	P，S	0~9999	315		●	●
1	Type code	P，S	0~100	66*		●	●
2	Software version (read only)	P，S	*	*		●	●
3	Initial state display	P，S	0~21	0		●	●
4	Control mode selection	P，S	0~7	0		●	●
5	Speed proportional gain	P，S	5~1280	*	0.1	●	●
6	Speed integral time constant	P，S	1~32767	*	0.1ms	●	●
7	Torque command filter	P，S	40~2000	100	%	●	●
8	Speed detection low-pass filter	P，S	10~2000	40	%	●	●
9	Postion proportional gain	P	1~2000	245		●	●
10	Position feedforward gain	P	0~1280	200	0.1	●	●
11	Position feedforward low-pass filter cut-off frequency	P	1~2000	300	Hz	●	●
12	Position command pulse division frequency numerator	P	1~32767	8192		●	●

Continued:

No.	Description	Application	Parameter range	Factory value	Unit	Drive unit interface type	
						I	II
13	Position command division pulse denominator	P	1~32767	500		●	●
14	Position command pulse input mode	P	0~2	0		●	○
15	Position command pulse reverse direction Position command pulse direction inversion	P	0~1	0		●	○
16	Positioning completion range	P	0~32767	20	pulse	●	○
17	Position deviation detection range	P	0~32767	4000	×100	●	●
18	Invalid position deviation	P	0~1	0		●	●
19	Speed command low-pass filter cut-off frequency	P	15~15000	100	Hz	●	●
20	Invalid drive prohibition input	P，S	0~1	0		●	○
21	JOG running speed	S	-6000~6000	120	r/min	●	●
22	Speed command filter switch	P	0~1	0		●	●
23	Maximum speed limit	P，S	0~3000	2500	r/min	●	●
24	Internal speed 1	S	-6000~6000	0	r/min	●	○
25	Internal speed 2	S	-6000~6000	100	r/min	●	○
26	Internal speed 3	S	-6000~6000	300	r/min	●	○
27	Internal speed 4	S	-6000~6000	-100	r/min	●	○
28	Arrival speed	S	0~6000	500	r/min	●	○
29	Reserved						
30	Straight-line speed conversion numerator	P，S	1~32767	10		●	●
31	Straight-line speed conversion denominator	P，S	1~32767	1		●	●
32	Linear speed decimal point position	P，S	0~5	3		●	●
33	Speed in motor test mode	P	0~6000	100	r/min	●	●
34	Internal CCW torque limit	P，S	0~300	300*	%	●	●
35	Internal CW torque limit	P，S	-300~0	-300*	%	●	●
36	External CCW torque limit	P，S	0~300	100	%	●	○
37	External CW torque limit	P，S	-300~0	-100	%	●	○
38	Speed trial run, JOG running torque limit	S	0~300	100	%	●	●

Continued:

No.	Description	Application	Parameter range	Factory value	Unit	Drive unit interface type	
						I	II
39	Acceleration time constant	S	0~10000	0	1ms	●	●
40	Deceleration time constant	S	0~10000	0	1ms	●	●
41	Servo unit output pulse number	S	16~32767	2500	p/r	●	○
42	Reserved	P，S	0~1	0			
43	Speed command selection	S	0~1	1		●	○
44	reserved						
45	reserved						
46	Motor rotation direction control	S	0~3	0		●	●
47	AD conversion analog command gain	S	20~3000	1000		●	○
48	AD conversion analog command zero drift adjustment	S	0~32767	2767		●	○
49	reserved						
50	Analog command low-pass filter cut-off frequency	S	0~32767	200	Hz	●	○
51	Analog command AD result filter low-pass frequency	S	0~32767			●	○
52	Parameter auto setting current limit value	P，S	1~100	40	%	●	●
53	Parameter auto setting speed filter coefficient	P，S	10~2000	200		●	●
54	analog gain in positive analog voltage	S	20~3000	1000	0.001	●	○
55	Analog gain in negative analog voltage	S	20~3000	1000	0.001	●	○
56	When Feedback pulse＞10000, pulse output time in advance	S	0~32767		0.1ms	●	○
57	reserved						
58	Acceleration feedback gain	P，S	0~-10000	0	0.001	●	●
59	reserved	P	1~4	2			
60	Current proportional gain	P，S	0~12800	1500		●	●
61	Current integral time constant	P，S	0~32767	110	0.1ms	●	●

Note: ● for validity, ○ for invalidity

4.2 Specification for Parameter Meaning

Table 4-2 Parameter Function

No.	Description	Parameter range	Default value	Unit	Application	Drive unit interface type	
						I	II
PA0	Parameter password	0~9999	315		P，S	●	●
	①Used for preventing parameters from being modified by mistake. In general, when a parameter needs to be set, set the parameter to desired password firstly, and then perform adjustment. After debugging, set the parameter to 0 to ensure the parameter will not be modified by mistake. ②There are different password levels corresponding to user parameter, system parameter and all parameter respectively. ③Only type code passwords can be used to modify type code parameters (PA1), other passwords are unavailable for modifying the parameters. User password is 315, and type code password is 385.						
PA1	Motor type code	0~100	66		P，S	●	●
	①Corresponds to a series of servo units and motors with different power. ②Different type codes correspond to different parameter default values. When using the function of default parameter restoration, ensure the correctness of the parameter. ③When absolute encoder disconnection alarm or invalid motor type alarm occurs immediately after power is turned on, default parameters should not be restored automatically until the trouble is cleared. Otherwise, the drive unit will be abnormal or damaged. ④Before modifying the parameter, set password PA0 to 385. ⑤See this chapter for detailed information about the parameter.						
PA2	Software version	\	3.06		P，S	●	●
	Software version can be checked but not be modified (read only)						
PA3	Initial display state	0~20	0		P，S	●	●
	Parameter value	Explanation		Parameter value	Explanation		
	PA3=0	Display motor speed		PA3=11	Display position command pulse frequency		
	PA3=1	Display current position low order 4 digits		PA3=12	Display speed command		
	PA3=2	Display current position high order 4 digits		PA3=13	Display torque command		
	PA3=3	Display position command (accumulation) low order 4 digits		PA3=14	Display absolute encoder single-revolution data		

Continued:

	Parameter value	Explanation	Parameter value	Explanation
PA3	PA3=4	Display position command (accumulation) high order 4 digits	PA3=15	Display absolute encoder multiple-revolution data
	PA3=5	Display position deviation lower order 4 digits	PA3=16	Display input terminal state
	PA3=6	Display position deviation high order 4 digits	PA3=17	Display output terminal state
	PA3=7	Display motor torque	PA3=18	Display encoder input signal
	PA3=8	Display motor current	PA3=19	Display running state
	PA3=9	Display linear speed	PA3=20	Display alarm code
	PA3=10	Display control mode	PA3=21	Display analog command voltage value

No.	Description	Parameter range	Default value	Unit	Application	Drive unit interface type	
						I	II
PA4	Control mode selection	0~7	0		P，S	●	●

①：**Set the control modes of the drive unit by this parameter.**

0：Position control mode　　1：Speed control mode

2：Trial run control mode　　3：JOG control mode

4：Encoder zero-setting mode　　5：Motor test mode

6：Open-loop running mode (used for motor test and encoders)

7：Drive unit type writing mode

② **Explanation**

a：Position control mode: position command is output from the pulse input port.

b：Speed control mode: whether the speed commands are input from input terminals or analog value is decided by parameter [internal or external speed command selection] (PA42). When using internal speed, use the combination of SC1 and SC2 to select different kinds of internal speed.

c：Trial run control mode: the speed command is input from the keyboard. It is used for testing drive units and motors.

d：JOG control mode: In JOG mode, the motor runs at JOG speed when ⇧ is pressed and held, while the motor stops and remains zero speed when the button is released; the motor runs reversely at JOG speed when ⇩ is pressed and held, while the motor stops and remains zero speed when the button is released.

e：Encoder zero-setting mode: used for the adjustment of the code disc zero point before delivery.

f：Motor test mode: used to test drive units and motors in position control mode.

g：Open-loop running mode: used for equipment maintenance by manufacturer technician.

h：Drive unit type writing mode: used for writing drive unit types before delivery.

Continued:

No.	Description	Parameter range	Default value	Unit	Application	Drive unit interface type	
						I	I
PA5	Speed proportional gain	5~1280	155	0.1	P，S	●	●
	①Set the proportional gain for the speed loop regulator. ②The greater the setting value is, the higher the gain is and the bigger the rigid is. The parameter value is decided by actual servo drive unit types and load conditions. ③ Set the value as big as possible when no vibration is produced in the system.						
PA6	Speed integral time constant	0~32767	85	0.1ms	P，S	●	●
	①It sets the integral time constant for the speed loop regulator. ② The smaller the setting value is, the faster the integral speed is and the bigger the rigid is. The parameter value is decided by actual servo drive unit types and load conditions. In general, the greater the load inertia is, the greater the setting value is. ③ Set the value as small as possible when no vibration is produced in the system.						
PA7	Torque command filter coefficient	40~2000	100	%	P，S	●	●
	①It sets torque command filter characteristics. Resonance (sharp vibration noise made by the motor) produced by the torque can be curbed. ②If the motor makes sharp vibration noise, please reduce the parameter value. ③The smaller the value is, the lower the cut-off frequency and the motor noise are. If the load inertia is too large, reduce the setting value appropriately. An excessively small value will cause slow response and instability. ④ The greater the value is, the higher the cut-off frequency is and the faster the response is. If higher mechanical rigid is required, increase the setting value appropriately.						
PA8	Speed detection low-pass filter coefficient	10~2000	40	%	P，S	●	●
	①It sets speed detection low-pass filter characteristics; ②The smaller the value is, the lower the cut-off frequency and the motor noise are. If the load inertia is too large, reduce the setting value appropriately. An excessively small value will cause slow response and vibration. ③The greater the value is, the higher the cut-off frequency is and the faster the speed feedback response is. If higher speed response is required, increase the setting value appropriately.						
PA9	Position proportional gain	0~2000	245	0.001	P	●	●
	①It sets the proportional gain for the position loop regulator ②The greater the setting value is, the higher the gain is, the bigger the rigid is and the smaller the position lag is. However, an excessively big value may cause vibration or overshoot. ③The parameter value is decided by actual servo drive unit types and load conditions.						

Continued:

No.	Description	Parameter range	Default value	Unit	Application	Drive unit interface type	
						I	I
PA10	Position feedforward gain	0~1280	0	0.1	P	●	●
	①It sets the feedforward gain for the position loop. ②When it is set to100%, it means the position lag is always zero in any frequency of command pulses. ③Increasing the position loop feedforward gain can improve the high-speed response characteristics of the control system, but also cause system instability and vibration. ④The position loop feedforward gain is usually 0 unless extremely high response characteristic is needed.						
PA11	Position feedforward low-pass cut-off frequency	1~2000	300	Hz	P	●	●
	①It sets the feedforward low-pass filter cut-off frequency for position loop ②This filter is used for increasing the stability of compound position control.						
A12	Position command pulse frequency division numerator	0~32767	8192		P	●	●
	①It sets the frequency division and frequency doubling (electronic gear) for position command pulse ②In the position control mode, various pulse sources can be matched conveniently by setting parameter PA12 and PA13 to reach desired control resolution (i.e., angle/pulse). ③ $P \times G = N \times C \times 4$ P: pulse number of input command; G: electronic gear ratio $G = \frac{\text{Division frequency numerator}}{\text{Division frequency denominator}}$ N: motor rotation number C: photoelectric encoder line/revolution, C＝131072 in this system. ④Example: when the input pulse is 6000, the servo motor rotates 1 time, $G = \frac{N \times C}{P} = \frac{1 \times 131072}{6000} = \frac{8192}{375}$ Then parameter PA12 is set to 8192, PA13 is set to 375. ⑤The recommended range for electronic gear ratio is: $\frac{1}{50} \le G \le 50$						
PA13	Division frequency denominator of position command pulse	0~32767	500		P	●	●
	Refer to PA12.						

Continued:

No.	Description	Parameter range	Default value	Unit	Application	Drive unit interface type	
						I	II
PA14	Input mode of position command pulse	0~2	0		P	●	○
	It sets the input form of position command pulse: 0: pulse+sign 1: CCW pulse/CW pulse 2: quadrature encoder pulse **Note 1: CCW is observed from the radial direction of the servo motor, CCW rotation is defined as the positive direction.** **Note 2: CW is observed from the axial direction of the servo motor, CW rotation is defined as the negative direction.**						
PA15	Position command pulse direction inversion	0~1	0		P	●	○
	It is set to: 0: normal 1: reverse position command direction						
PA16	Positioning completion range	0~32767	20		P	●	○
	①It sets the pulse range of positioning completion in position control ②This parameter provides judgements for a drive unit to judge whether the positioning is completed in position control mode. When the afterpulse number in the position deviation counter is smaller than or equal to the setting value of the parameter, the drive unit assumes that the positioning is completed, and the positioning completion signal COIN is ON, otherwise COIN is OFF. ③In position control mode, the position completion signal COIN is output; in other control modes, the speed arrival signal SCMP is output.						
PA17	Position deviation detection range	0~32767	4000		P	●	●
	①It sets the detection range for position deviation alarm. ②When the counter value of the position deviation counter exceeds the value of the parameter, the servo drive unit gives position deviation alarm.						
PA18	Invalid Position deviation error	0~1	0		P	●	●
	It is set to: 0: position deviation alarm detection is valid 1: position deviation alarm detection is invalid, and position deviation error detection is stopped.						
PA19	Speed command low-pass filter cut-off frequency	15~15000	100		P	●	●
	① It sets the low-pass filter cut-off frequency for position loop output value. The filter is used for improving the stability of the compound position control. ② When PS22=0, the parameter is invalid; when PA22=1, the parameter is valid.						

Continued:

<table>
<tr><th rowspan="2">No.</th><th rowspan="2">Description</th><th rowspan="2">Parameter range</th><th rowspan="2">Default value</th><th rowspan="2">Unit</th><th rowspan="2">Application</th><th colspan="2">Drive unit interface type</th></tr>
<tr><th>I</th><th>II</th></tr>
<tr><td rowspan="2">PA20</td><td>Invalid drive prohibition input</td><td>0~1</td><td>0</td><td></td><td>P，S</td><td>●</td><td>○</td></tr>
<tr><td colspan="7">When it is set to:
0: CCW and CW input prohibition are valid. When CCW drive prohibition switch (FSTP) is ON, CCW drive is enabled. When CCW drive prohibition switch (FSTP) is OFF, CCW torque keep unchanged as o; CW is similar. If both of CCW and CW drive prohibition are OFF, the alarm for drive prohibition input error will be given.
1: CCW and CW input prohibition cancel. Whatever state CCW and CW drive prohibition switch are in, CCW and CW drive are enabled. Meanwhile, even if both of CCW and CW drive prohibition are OFF, the alarm for drive prohibition input error will not be given.</td></tr>
<tr><td rowspan="2">PA21</td><td>JOG running speed</td><td>-6000~6000</td><td>100</td><td>r/min</td><td>S</td><td>●</td><td>●</td></tr>
<tr><td colspan="7">It sets the running speed for JOG operation</td></tr>
<tr><td rowspan="2">PA22</td><td>Speed command filter switch</td><td>0~1</td><td>0</td><td></td><td>P</td><td>●</td><td>●</td></tr>
<tr><td colspan="7">In position control mode, when it is set to 1, the function of the speed command filter is enabled; when it is set to 0, the function is disabled.</td></tr>
<tr><td rowspan="2">PA23</td><td>Max. speed limit</td><td>0~3000</td><td>3000</td><td>r/min</td><td>P，S</td><td>●</td><td>●</td></tr>
<tr><td colspan="7">①It sets the max. speed limit for the servo motor.
②Not related to the rotation direction.</td></tr>
<tr><td rowspan="2">PA24
～
PA27</td><td>Internal speed 1～4</td><td>-6000~6000</td><td>0</td><td>r/min</td><td>S</td><td>●</td><td>○</td></tr>
<tr><td colspan="7">
<table>
<tr><th>SC1</th><th>SC2</th><th>Internal speed</th></tr>
<tr><td>OFF</td><td>OFF</td><td>Internal speed （PA24）</td></tr>
<tr><td>OFF</td><td>ON</td><td>Internal speed 2（PA25）</td></tr>
<tr><td>ON</td><td>OFF</td><td>Internal speed 3（PA26）</td></tr>
<tr><td>ON</td><td>ON</td><td>Internal speed 4（PA27）</td></tr>
</table>
</td></tr>
<tr><td rowspan="2">PA28</td><td>Arrival speed</td><td>0~6000</td><td>500</td><td>r/min</td><td>S</td><td>●</td><td>○</td></tr>
<tr><td colspan="7">①It sets the arrival speed
②In non-position control mode, if the motor speed exceeds the setting value, the SCMP is ON, or else SCMP is OFF.
③The parameter is not used in position control mode.
④It is not related to the rotation direction.
⑤The comparator has hysteresis characteristic.</td></tr>
</table>

Continued:

No.	Description	Parameter range	Default value	Unit	Application	Drive unit interface type	
						I	II
PA30	Straight-line speed conversion numerator	1~32767	10		P，S	●	●
	①Used for displaying the system straight-line speed ② $\text{Straight line speed} = \text{motor speed} \times \frac{\text{straight-line speed conversion numerator}}{\text{straight-line speed conversion denominator}}$ ③The decimal point position of the straight-line speed is decided by parameter PA32. 0 means no decimal point, 1 means decimal point in ten's place, 2 means decimal point in hundred's place, and so on. ④Example: when the servo motor drives a ballscrew of 10mm, set the conversion numerator of the straight-line speed to 10, denominator to 1, decimal point position to 3. The straight-line speed can be displayed on the screen in m/min, when the motor speed is 500r/min, the screen will display the straight-line speed of 5.000m/min.						
PA31	Straight-line speed conversion denominator	1~32767	1		P，S	●	●
	Refer to parameter PA30						
PA32	Decimal point position of straight-line speed	0~5	3		P，S	●	●
	Refer to parameter PA30						
PA33	Speed in motor test mode	0~6000	100	r/min	P	●	●
	When the servo unit is in position control mode, select "oL"and press ↵ to enter motor test mode. The test speed is decided by the parameter.						
PA34	Internal CCW torque limit	0~300	300	%	P，S	●	●
	①It sets the internal torque limitation when the servo motor performs CCW rotation. ②The setting value is the percentage of the rated torque, for example, if the desired result is two times that of the rated torque, set the value to 200. ③ The limit is always valid. ④If the setting value exceeds the max. overload capacity permitted by the system, the actual torque limitation is the max. overload capacity.						
PA35	Internal CW torque limitation	-300~0	-300	%	P，S	●	●
	①It sets the value of the CW internal torque limitof the servo motor. ②The setting value is the percentage of the rated torque. For example, if the desired result is twice that of the rated torque, set the value to -200. ③The limit is always valid. ④If the setting value exceeds the max. overload capacity permitted by the system, the actual torque limitation is the max. overload capacity.						

Continued:

No.	Description	Parameter range	Default value	Unit	Application	Drive unit interface type	
						I	II
PA36	External CCW torque limit	0~300	100	%	P，S	●	○
	① It sets the value of external torque limitation when the servo motor performs CCW rotation. ② The setting value is the percentage of rated torque. For example, if the desired result is once that of the rated torque, set the value to 100. ③ The limit is valid only when the input terminal (FIL) of the CCW torque limitation is ON. When the limit is valid, the actual torque limitation is the smallest value of the absolute values of system permissible max. overload capacity, internal CCW torque limit and external CCW torque limit.						
PA37	External CW torque limit	-300~0	-100	%	P，S	●	○
	①It sets the external torque limit when the servo motor performs CW rotation. ②The setting value is the percentage of the rated torque. For example, if the desired result is once that of the rated torque, set the value to -100. ③The limit is valid only when the input terminal (RIL) of CW torque limit is ON. ④When the limit is valid, the actual torque limit is the smallest value of the absolute values of max. system permissible overload capacity, internal CW torque limit and external CW torque limit.						
PA38	Torque limit of speed trial run and JOG operation	0~300	100	%	S	●	●
	①It sets the torque limitation in the speed trial run and JOG operation. ②It is not related to the rotation direction, and bidirection is valid. ③The setting value is the percentage of the rated torque. For example, if the desired result is once that of the rated torque, set the value to 100. ④The internal and external torque limit is still valid.						
PA39	Acceleration time constant	0~10000	0	1ms	S	●	●
	①The setting value shows the motor acceleration time from 0r/min to 1000r/min. ②Acceleration/deceleration characteristics are linear. ③Only used in the speed control mode, invalid in the position control mode. ④If the drive unit is used in combination with an external position loop, the parameter should be set to 0.						
PA40	Deceleration time constant	0~10000	0	1ms	S	●	●
	①The setting value is the motor deceleration time from 1000r/min~0r/min. ②Acceleration/deceleration characteristics are linear. ③Only used in speed control mode, invalid in position control mode. ④If drive units are used in combination with external position loops, the parameter should be set to 0.						

Continued:

No.	Description	Parameter range	Default value	Unit	Application	Drive unit interface type	
						I	II
PA41	Servo unit output pulse number	0~32767	2500	p/r	S	●	○
	The pulse number, which is output to an upper computer by per-revolution feedback data from an encoder, is set by this parameter in the drive unit. For example, if the desired signal of phases A and B output from the drive unit is 15000pulses/revolution, set the parameter to 15000.						
PA43	Speed command selection	0~1	1		S	●	●
	Whether the running speed comes from internal speed or analog command: 0 internal command speed 1 external command speed						
PA46	Motor rotation direction control	0~3	0		S	●	●
	0 normal 1 speed command is reversed speed command inversion. 2 output pulse rotation direction inversion. 3 Both are inversed.						
PA47	Analog command gain coefficient	20~3000	1000	0.001	S	●	○
	The greater the gain that the analog command converts to speed is, the higher the rigid is. However, an excessively great value will cause system vibration. In position control mode, the parameter is invalid. It works together with parameter number 54 and number 55. The speed command actual gain is equal to PA47*PA54 when the analog command voltage is positive, and equal to PA47*PA55 when negative.						
PA48	Analog command zero-drifted compensation	0~32767	2767		S	●	○
	Even if the command voltage is 0V, the motor may still rotate at very low speed sometimes. This is because the command voltage (unit: mv) from an upper computer or external has slight offset (command offset). If there is zero-drifted phenomenon in the motor, offset the reverse voltage value of (zero-drifted rotating speed *10) in PA48.						
PA50	Analog command low-pass filter cut-off frequency	0~32767	200		S	●	○
	① Analog command filter: increasing the parameter can improve the speed response while reducing the parameter can make the motor speed smoother. The smaller the parameter is, the slower the motor speed response is, and vice versa. ② The smaller the value is, the stronger the anti-interference ability is; the greater the value is, the weaker the anti-interference ability is.						

Continued:

No.	Description	Parameter range	Default value	Unit	Application	Drive unit interface type	
						I	II
PA52	Parameter auto setting current limit value	1~100	40	%	P，S	●	●
	When the servo performs parameter auto setting, the parameter used for limiting the current output value is set by manufacturer.						
PA53	Parameter auto setting speed filter coefficient	10~2000	200		P，S	●	●
	When the servo performs parameter auto setting, the speed low-pass filter cut-off frequency coefficient is set by the manufacturer.						
PA54	Analog gain in positive analog voltage	20~3000	1000		S	●	○
	① It works together with parameter No.47 to affect the analog command voltage gain. Refer to parameter No.47. ② Difference between positive and negative voltages of external analog commands causes inconsistency between position feedback following error of motor positive rotation and the one of negative rotation. To achieve consistency, adjust this parameter.						
PA55	Analog gain in negative analog voltage	20~3000	1000		S	●	○
	① It works together with parameter No.47 to affect analog command voltage gain. Refer to parameter No.47. ② Difference between positive and negative voltages of external analog commands causes inconsistency between position feedback following error of motor positive rotation and the one of negative rotation. To achieve consistency, adjust this parameter.						
PA56	Pulse output time in advance when parameter No. 41 is greater than 10000.	0~32767	20		S	●	○
	Ensure the output is corret when absolute encoder position data is converted to relative pulse data, the factory setting is done.						
PA58	Acceleration command feedforward gain	0~-10000	0	0.001	P，S	●	●
	Acceleration feedback function means the acceleration, which is obtained by differentiating the speed feedback signal of the motor with softwares, multiplies the acceleration feedback gain to compensate the torque command. It is used to curb vibration of a speed loop. For example, When vibration is generated because of system instability, such as the connection between motor and mechanical system is elastic and the mechanical inertia is bigger than the motor inertia, the function can stabilize the servo system.						

Continued:

No.	Description	Parameter range	Default value	Unit	Application	Drive unit interface type	
						I	II
PA60	Current proportional gain	0~12800	1500	0.001	P，S	●	●
	①It sets the proportional gain for a loop regulator. ②The greater the setting value is, the higher the gain is and the smaller the current following error is. However, an excessively high gain will cause noise or vibration. ③ It is only related to the servo drive unit and motor, not to the load. ④ Set the value as great as possible under the condition of no vibration in the system.						
PA61	Current integral time constant	0~32767	110	0.1ms	P，S	●	●
	① It sets the current loop to adjust integral time constant. ② The smaller the setting value is, the faster the integral speed is and the smaller the current following error is. However, excessively small integral time will cause noise or vibration. ③ Only related to the servo drive unit and motor, not to the load; in general, the greater the motor electromagnetic time constant is, the greater the integral time constant is. ④ Set the value as small as possible under the condition of no vibration generated in the system.						

4.3 Comparison Table of Type Code Parameters and Spindle Motors

Table 4-4 comparison table for No.1 parameter and SJT servo motors with absolute encoders

№1 parameter	Servo motor type and technical parameter	Remark
61	110SJT-M040D（A4），1.0kW, 300V, 2500 r/min, 4.5A, 0.68×10^{-3}kg.m^2	
62	110SJT-M060D（A4），1.5 kW 300V, 2500 r/min, 7A, 0.95×10^{-3}kg.m^2	※
63	130SJT-M040D（A4），1.0 kW 300V, 2500 r/min, 4A, 1.1×10^{-3}kg.m^2	
64	130SJT-M050D（A4），1.3 kW 300V, 2500 r/min, 5A, 1.1×10^{-3}kg.m^2	
65	130SJT-M060D（A4），1.5 kW, 300V, 2500 r/min , 6A, 1.33×10^{-3}kg.m^2	
66	130SJT-M075D（A4），1.88 kW, 300V, 2500 r/min, 7.5A, 1.85×10^{-3}kg.m^2	※
67	130SJT-M100B（A4），1.5 kW, 300V, 1500 r/min, 6A, 2.42×10^{-3}kg.m^2	
68	130SJT-M100D（A4），2.5 kW, 300V, 2500 r/min, 10A, 2.42×10^{-3}kg.m^2	※
69	130SJT-M150B（A4），2.3 kW, 300V, 1500 r/min, 8.5A, 3.1×10^{-3}kg.m^2	※
59	130SJT-M150D（A4），3.9 kW, 300V, 2500 r/min, 14A, 3.6×10^{-3}kg.m^2	※※
25	175SJT-M180B（A4），2.8 kW, 300V, 1500 r/min, 15A, 6.5×10^{-3}kg.m^2	※※
27	175SJT-M180D（A4），3.8 kW, 300V, 2500 r/min, 16.5A, 6.5×10^{-3}kg.m^2	※※
26	175SJT-M220B（A4），3.5 kW, 300V,1500 r/min, 17.5 A, 9.0×10^{-3}kg.m^2	※※
28	175SJT-M220D（A4），4.5 kW, 300V,2500 r/min, 19 A, 9.0×10^{-3}kg.m^2	※※
26	175SJT-M300B（A4），4.7kW, 300V,1500 r/min, 24 A, 11.2×10^{-3}kg.m^2	※※
28	175SJT-M300D（A4），6 kW, 300V,2500 r/min, 27.5A, 11.2×10^{-3}kg.m^2	※※

Note

- **Drive units matching the motors with ※ in the above table must adopt thickene radiators.**
- **Drive untis matching the motors with ※※ must adopt thickened radiators and fans.**

CHAPTER 5 ALARM AND TROUBLSHOOTING

Note

- **Only qualified persons can execute check and maintenance.**
- **Do not touch the driver and motor in 5 minutes after they are switched off to avoid electric shock and burn.**
- **When an alarm occurs in a drive unit, remove the malfunction firstly according to the alarm code, and then use the driver.**
- **Before resetting an alarm, confirm SON (the servo is valid) signal is invalid to avoid unexpected accidents Caused by a motor’s sudden start.**

5.1 Alarm List

Table5-1 Alarm List

Alarm code	Alarm name	Content
--	Normal	
1	Overspeed	Servo motor speed exceeds its setting value
2	Main circuit overvoltage	Main circuit power is overvoltage
3	Main circuit undervoltage	Main circuit power is undervoltage
4	Position deviation	The value of the position deviation counter exceeds its setting value.
5	Motor overheat	Motor temperature is too high.
6	Speed amplifier saturation fault	The speed regulator is saturated for a long time.
7	Drive prohibition abnormality	Both CCW and CW drive prohibition input are OFF.
8	Position deviation counter overflow	The absolute value of the position deviation counter exceeds $2^{30.}$
9	Encoder communication error	Encoder communication data error
10	Control power supply undervoltage	The voltage of the control power is too low.
11	IPM module fault	IPM intelligent module fault
12	Overcurrent	The motor current is excessive.
13	Overload	The servo drive unit and motor are overloaded (instantaneous overheat)
14	Brake fault	Brake circuit fault
15	Motor pole-pairs number error alarm	The motor pole-pairs number does not match its corresponding motor.
16	Main circuit power failure alarm	No power is supplied in the main circuit.
17	Parameter auto setting failure alarm	Parameter setting error occurs when the servo performs parameter auto setting.
18	Invalid motor type	The motor type is not written into EEPROM of the absolute encode.
19	Encoder disconnection alarm	Encoder cables are disconnected or broken.
20	EEPROM error	EEPROM error

22	Gsk-link initialization failure alarm	Gsk-link initialization failed, DSP reading FPGA failed, FPGA works abnormally or a wrong program is downloaded.

5.2 Alarm Troubleshooting

Fig. 5-2 Alarm troubleshooting

Alarm code	Alarm name	Running state	Cause	Troubleshooting
1	Overspeed	Occurs immediately after being connected to power supply	①Control circuit board fault ②Encoder fault	①Replace the servo drive unit. ②Replace the servo motor.
		Occurs during motor running	Input command pulse frequency is too high.	Set input command pulse correctly.
			Acceleration/deceleration time constant is too small, making speed overshoot too high.	Increase acceleration/deceleration time constant.
			The input electronic gear ratio is too big	Set it correctly.
			Encoder fault	Replace the servo motor.
			Inferior encoder cable	Replace the encoder cable.
			Overshoot caused by an instable servo system	① Reset relative gains. ② If the gain cannot be set to a proper value, reduce the ratio of the load rotary inertia.
		Occurs immediately after the motor is started	The load inertia is too big.	① Reduce the load inertia. ② Replace the drive unit and motor with higher-power ones.
			Encoder zero error	① Replace the servo motor. ② Request the manufacture to reset the encoder zero.
			① Motor lead-out wire U, V and W connection error ② Cable lead-out wire connection error	Connect the wires correctly.

Continued:

2	Main circuit overvoltage	Occurs immediately after being connected to control power supply	Circuit board fault	Replace the servo drive unit.
		Occurs immediately after being connected to main power supply	① Power supply overvoltage ② Abnormal power supply voltage waveform	Check the power supply.
		Occurs during motor running	The rake resistance cable is disconnected.	Re-connect the cable.
			① The brake transistor is damaged. ② The Internal brake resistance is damaged.	Replace the servo drive unit
			The brake circuit capacity is Insufficient.	① Reduce the on-off frequency. ② Increase the acceleration/deceleration time constant. ③ Reduce the torque limitation value. ④ Reduce the load inertia. ⑤ Replace the drive unit and motor with higher-power ones.
3	Main circuit undervoltage	Occurs immediately after being connected to control power supply	① Circuit board fault ② Power supply fuse damage ③ Soft starting circuit fault ④ Rectifier damage	Replace the servo drive unit
			① The power supply voltage is low. ② Power is cut off for more than 20ms temporarily.	Check the power supply
		Occurs during motor running	① Insufficient power supply capacity ② Instantaneous power down	Check the power supply
			Radiator overheat	Check the loading conditions

Continued:

4	Position deviation	Occurs immediately after being connected to power supply	Circuit board fault	Replace the servo driver.
		The motor does not rotate after the main power supply and control wire are connected and command pulses are input.	① Incorrect connection for motor lead-out wires U, V and W ② Incorrect connection for encoder cable lead-out wires	Connect the wires correctly.
			Encoder fault	Replace the servo motor.
			Detecting range of the position deviation is too small.	Increase the detecting range.
			The position proportional gain is too small.	Increase the gain.
			Insufficient torque	① Check the torque limitation value. ② Reduce the load capacity. ③ Replace the drive unit and motor with higher-power ones.
			The command pulse frequency is too high.	Reduce the frequency.
			No connection between drive shell and system shell.	Ensure good electric connection between the two shells.
5	Motor overheat	Occurs immediately after being connected to power supply	Circuit board fault	Replace the servo drive unit.
			① Broken cable ② Damaged temperature relay inside the motor	① Check the cable ② Check the motor
		Occurs during motor running	The motor is overloaded.	① Reduce the load. ② Reduce the on-off frequency. ③ Reduce the torque limitation value. ④ Reduce the related gains. ⑤ Replace the drive unit and motor with higher-power ones.
			Motor internal fault	Replace the servo motor.

Continued:

6	Speed amplifier saturation fault	Occurs during motor running	The motor is mechanically blocked to stop.	Check the mechanical parts of the load.
			Overload	① Reduce the load. ② Reduce the drive unit and motor with higher-power ones.
7	Drive prohibition abnormality		Both the input terminals of CCW and CW drive prohibition are disconnected.	Check the connection and input terminal power supply.
8	Position deviation counter overflow		① Motor is mechanically blocked to stop. ② Abnormal input command pulse	① Check the mechanical parts of the load. ② Check the command pulse. ③ Check whether the motor rotation is connected to command pulses.
			The battery is out of power.	Replace the battery.
9	Encoder communication error		Encoder wiring error	Check the wiring.
			The encode is damaged	Replace the motor.
			Inferior encode cable	Replace the cable.
			The 485 differential chip is damaged.	Replace the servo drive unit.
			Low encoder voltage caused by long encoder cables	① Shorten the cables. ② Supply power with multiply cores in parallel connection.
10	Control power supply undervoltage		Low input control power supply	Check the control power supply.
			① Inferior connectors in the drive unit ② Abnormal switch power supply ③ Damaged chip	① Replace the drive unit. ② Check the connectors. ③ Check the switch power supply.
11	IPM module fault	Occurs Immediately after being connected to power supply	Circuit board fault	Replace the servo drive unit.

Continued:

11	IPM module fault	Occurs during motor running	① Low power-up voltage ② Overheat	① Check the drive unit. ② Power on again. ③ Replace the drive unit.
			Short circuit among drives U, V and W	Check the wiring.
			Bad ground	Be grounded correctly.
			Damaged motor insulation	Replace the motor.
			being interfered	① Add circuit filters. ② Be far away from the interference source.
12	Overcurrent		Short circuit among drive units U, V and W	Check the wiring.
			Bad ground	Be grounded correctly.
			Damaged motor insulation	Replace the motor.
			Damaged drive unit	Replace the drive unit.
13	Overload	Occurs immediately after being connected to control power supply	Circuit board fault	Replace the servo drive unit.
		Occurs during motor running	Exceeds the rated torque.	① Check the load. ② Reduce the on-off frequency. ③ Reduce the torque limitation value. ④ Replace the drive unit and motor with higher-power ones.
			Hold brake is not switched on.	Check the hold brake.
			The motor is instable and vibrating.	① High dynamic gain ② Increase the acceleration/deceleration time. ③ Reduce the load inertia.
			① Phase U, V or W is broken. ② Encoder wiring error	Check the wiring.

Continued:

14	Brake fault	Occurs immediately after being connected to control power supply	Circuit board fault	Replace the servo drive unit.
		Occurs during motor running	The brake resistance cable is disconnected.	Re-connect the cable
			① Damaged brake transistor ② Damaged internal brake resistance	Replace the servo drive unit.
			Insufficient brake circuit capacity	① Reduce the on-off frequency. ② Increase the acceleration/deceleration. time ③ Reduce the torque limitation value. ④ Reduce the load inertia. ⑤ Replace the drive unit and motor with high-power ones.
			Power supply of the main circuit is too high.	Check the main power supply
15	Motor pole-pairs number error	Occurs immediately after being connected to power supply or during motor running	The motor pole-pairs number does not match its corresponding motor.	Correct the motor pole-pairs number of its corresponding motor and power on again.
16	Main circuit Power failure alarm		The main circuit is not electrified.	Check the main power supply.
			The relay of the main circuit is switched off.	Check the main power supply.
			Main circuit undervoltage	Check the main power supply.
17	Parameter auto setting failure alarm	Occurs during servo parameter auto setting.	Parameter values after auto setting are invalid or the setting failed.	①Perform parameter auto setting after power on again. ②Adjust the parameter manually.

Continued:

18	Invalid motor type		① Motor types are not written to the EEPROM of the absolute encoder. ② Motor type codes are not read when power on.	①Motor types are not written to the absolute encoder when motor is out of factory or the written motor types are 0. ②Check whether the encoder cable is connected.
19	Encoder disconnection alarm		The encoder cable is disconnected or damaged.	Connect the encoder cable; replace the encoder cable.
20	EEPROM error		Damaged chip or circuit board	① Replace the servo drive unit. ② Reset the drive unit type with parameter No.1 after troubleshooting, and then restore the default parameters.
22	Gsk-link initialization failure alarm	Occurs immediately after being connected to power supply or during motor running	Gsk-link initiation failed, DSP reading FPGA failed, FPGA works abnormally or a wrong program is downloaded.	① Replace the servo drive unit. ② Replug the network cable.

CHAPTER 6 DISPLAY AND OPERATION

6.1 Keyboard Operation

- The driver panel consists of 6-LED digital tube display and 4 keys ▲ ▼ ◀ ↵, used for displaying various system states and setting parameters, etc. The functions of the keys are as follows:

  ▲: Sequence number, numerical value increment or forward selection

  ▼: Sequence number, numerical number decrement or backward selection

  ◀: Back to upper operation menu or cancel the operation.

  ↵: Enter into next operation menu or confirm the operation.

  Note: keep pressing ▲ or ▼, the operation is performed repetitively. The longer the holding time is, the faster the repetitive speed is.

- The 6-bit LED digital tube displays various states and data of the system, flashing of all digital tubes means alarm.
- Performance is executed among multi-layer operating menus. The first layer is the main menu including 8 operating modes and the second is the functional menu for each operating mode. Fig.6-1 is the operating frame of the main menu:

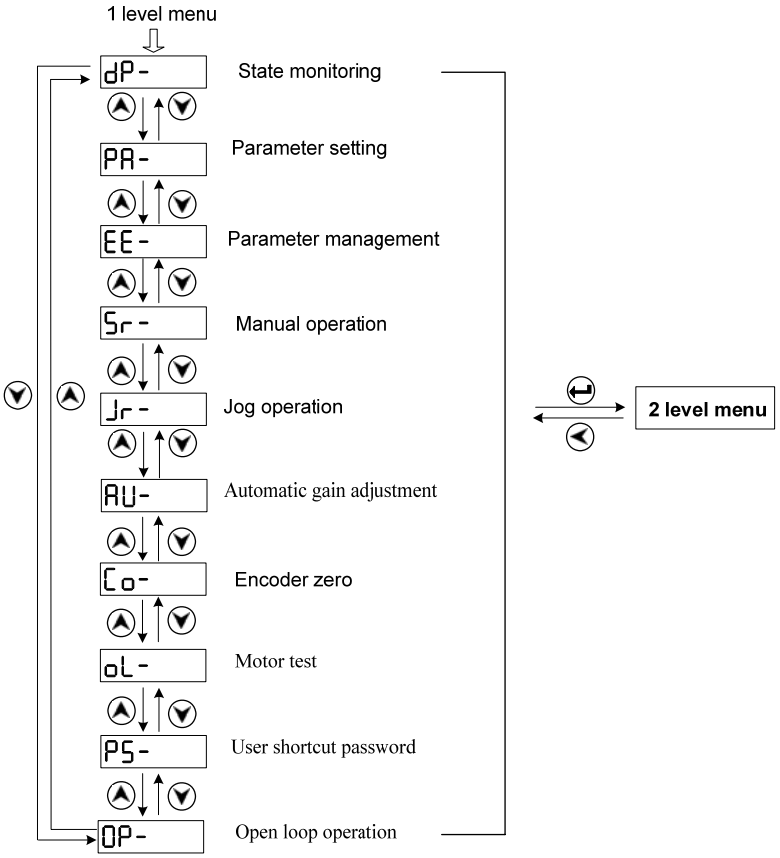

Fig. 6-1 Operating frame of mode selection

6.2 Monitoring Mode

Select “dP-“in the first layer, then press ↵ to enter the monitoring mode. Use ▲ and ▼ to select a desired display mode, and then press ↵ to enter specific display states (21 kinds of display states in total).

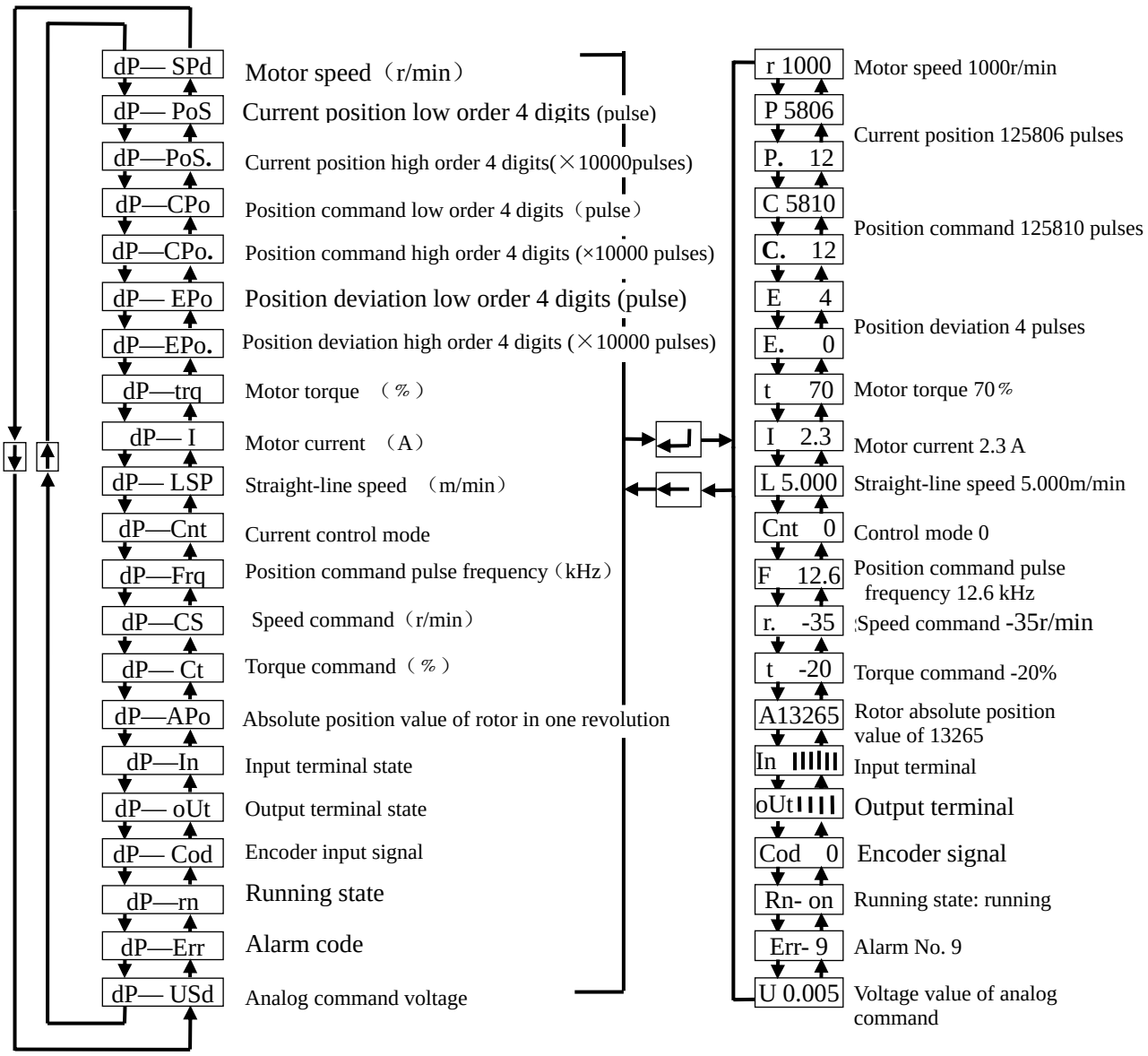

Fig.6-2 Operating frame of monitoring mode

Note 1: Position pulse value and command pulse value are the magnified ones after the electronic gear is input.

Note 2: The pulse unit is the internal pulse unit that is 131072 pulses/rev in this system. The magnitude for the pulse is described by high order 4 digits plus low order 4 digits and the calculation method is as follows: Pulse=high order 4-digit numerical value×10,000+low order 4-digit numerical value

Note 3: Control mode：0-position control；1-speed control；2-speed trial run; 3- run in JOG mode; 4-encoder zeroing; 5-open loop operation.

Note 4: If the display number reaches 6 digits (e.g., -12345), no more prompt character will be displayed.

Note 5: Pulse frequency of the position command is the actual one before being magnified by inputting the electronic gear and its min. unit is 0.1 kHz, with positive number for positive direction and negative number for negative direction.

Note 6: The calculation method of the motor current I is as follows: $I = \sqrt{\frac{2}{3}(I_U^2 + I_V^2 + I_W^2)}$

Note 7: The absolute position of a rotor in one revolution means the one relative to a stator. One rev is one cycle, and its range is 0~9999.

Note 8: input terminal display is shown in figure 6-3, and output terminal display is shown in figure 6-4.

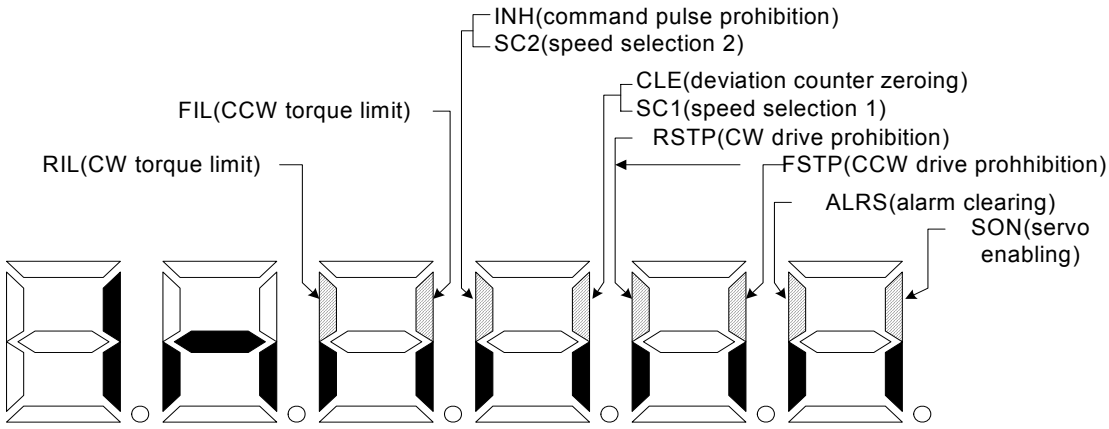

Fig. 6-3 Input terminal display (light is ON and poor light is OFF)

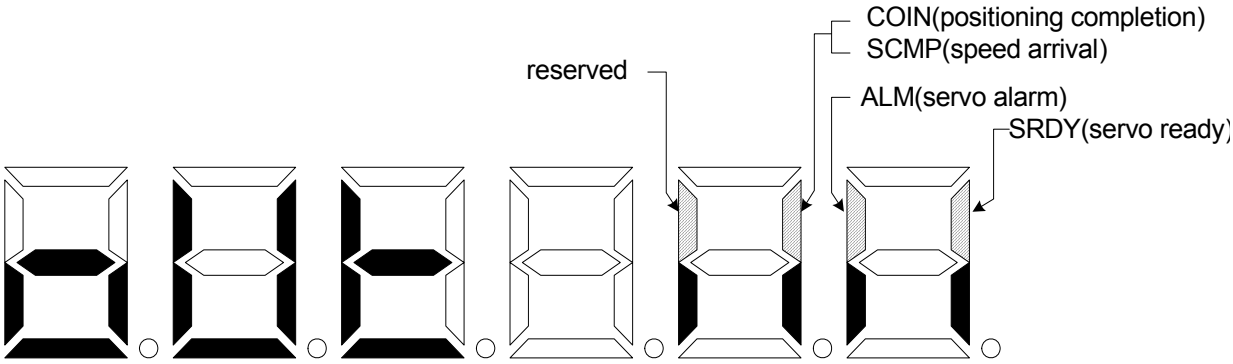

Fig. 6-4 Input terminal display (light is ON and poor light is OFF)

Note 9: running state:

"rn- oFF": The main circuit has not been charged and the servo system does not run.

"rn- CH": The main circuit has been charged and the servo system does not run (the servo is not enabled or an alarm occurs);

"rn- on": The main circuit has been charged and the servo system is running.

Note 10: only four digits are displayable for straight-line speed.

Note 11: "Err --" means the system is normal and no alarm occurs.

6.3 Parameter Setting

Note

- It is unavailable to modify parameters until parameter No. 0 is set to its corresponding value.
- Parameter setting takes effect immediately except parameter No. 1. Incorrect setting may result in incorrect equipment running and accidents.

Select “PA-”in the first layer, and press ↵ to enter parameter setting mode. Use ▲ and ▼ to select a parameter number, press ↵ to display the value of the parameter, then use ▲ and ▼ to modify the value; press ▲ or ▼ once to increase or decrease the parameter by 1; press and hold ▲ or ▼ to increase or decrease the parameter continuously. When the value of a parameter is being modified, the decimal point of the leftmost LED digital tube is lighting. When the modified value is confirmed by pressing ↵, the decimal point goes out and the modified value is reflected to the control immediately. After that, press ▲ or ▼ to continue the parameter modification. With the modification completed, press ◄ to return to parameter selection state. If the value being modified is not the desired one, press ◄ to cancel it instead of pressing ↵ to confirm it, then the parameter will restore to its previous value and backs to the parameter selection state.

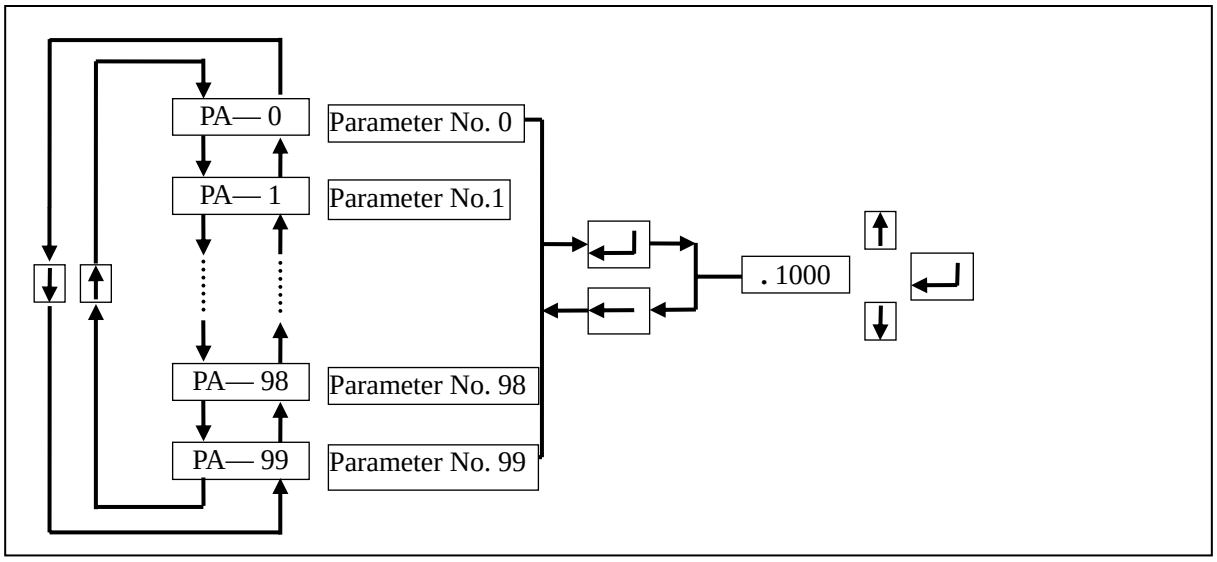

Fig. 6-6 Operation frame of parameter setting

6.4 Parameter Management

Parameter management mainly processes the operation between memory and EEPROM. Select “EE-”in the first layer, and press ↵ to enter into parameter management mode. Select an operation mode (6 modes in total) firstly by ▲ and ▼. Take Parameter Writing for example: select “EE-Set”, then press ↵ and hold it for more than 3 seconds. If the writing operation is successful, the screen will display “FInISH”, if not, display “Error”. Press ◄ again to return to operation selection mode.

- **EE－SEt** parameter writing. It means writing the parameters in memory to the

parameter area of EEPROM. User's modification for parameters only changes the parameter values in the memory so that the values will be restored to previous ones after power-on again. If the parameter values need to be changed permanently, perform parameter writing operation, then the parameters in memory are written to EEPROM parameter area and the modified parameters are valid after power on again.

- **EE－rd** parameter reading. It means reading the data in EEPROM parameter area to the memory. This process is automatically executed once after power on. In the beginning, the parameter values in the memory are the same as those in the EEPROMO parameter area. If user modifies the parameters, their values in the memory will be changed. When the modified parameter values are not the desired ones or the parameters are disordered, execute parameter reading operation to re-read the data in EEPROM parameter area to the memory, which restores the parameters to the ones on startup.
- **EE－bA** parameter backup. It means reading the parameters in the memory to EEPROM backup area. EEPROM consists of parameter area and backup area and it can save two sets of parameters. Its parameter area is used for system power-on, parameter reading and writing while its backup area is used for parameter backup and backup restoration. During parameter setting, if user is satisfied with one group of parameters needing further modification, execute parameter backup operation to save the parameters to EEPROM backup area, then modify the parameters again or end the modification. In this way, if the effect becomes poor later, user can execute backup restoration operation to re-read the parameters saved in the EEPROM backup area to the memory, and then re-modify or end the modification. Besides, after setting parameters, user can execute parameter writing and parameter reading to ensure the data in the parameter area and backup area is the same, which prevents parameters from being modified by mistake; user can also execute backup restoration operation to write the data in EEPROM backup area to the memory and then execute parameter writing operation to write the memory parameter to EEPROM parameter area.
- **EE－rS** backup restoration. It means reading the data in EEPROM backup area to the memory. Please note that the parameter writing is unavailable in this operation and the data read into the memory after power on again is still the one in EEPROM backup area. To use the parameters in the EEPROM backup area permanently, user needs to execute another parameter writing operation.
- **EE－dEF** default value restoration. It means reading all parameter default values (factory values) to the memory and writing them into the EEPROM parameter area. The default values are used after power on again. This operation can restore all parameters to their factory states if the system works abnormally because of incorrect parameter adjustment. Ensure the drive unit type (parameter No.1) is right when executing default parameter restoration, for different drive unit types correspond to different default values.
- **EE－Cr** writing drive unit types to encoders. It indicates that the drive unit types are written to the EEPROM of encoders. This operation is for manufacturer rather than user so that user's operation is invalid.

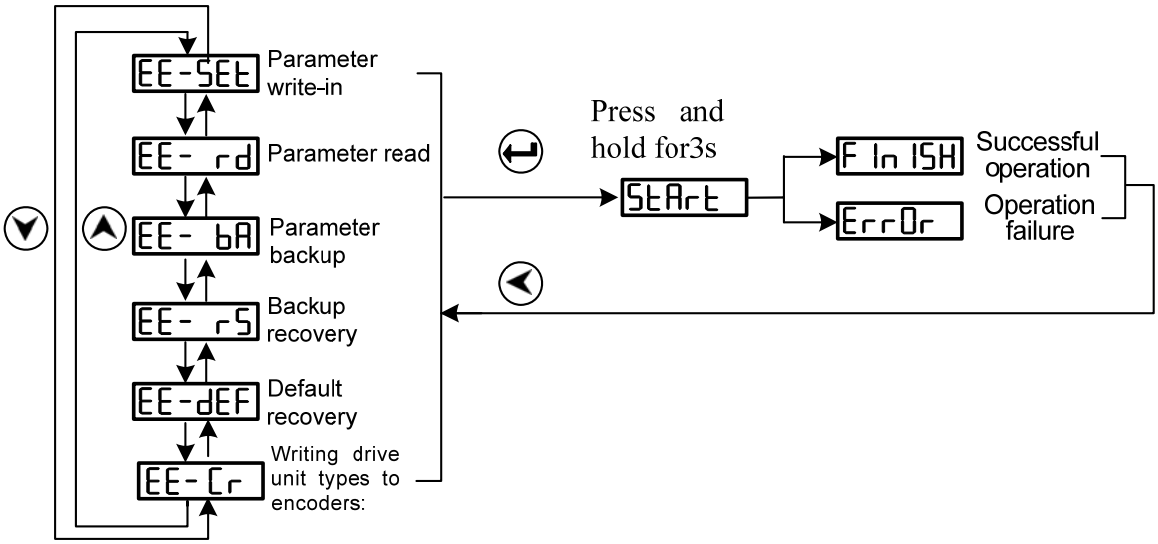

Fig. 6-7 Operating frame of parameter management

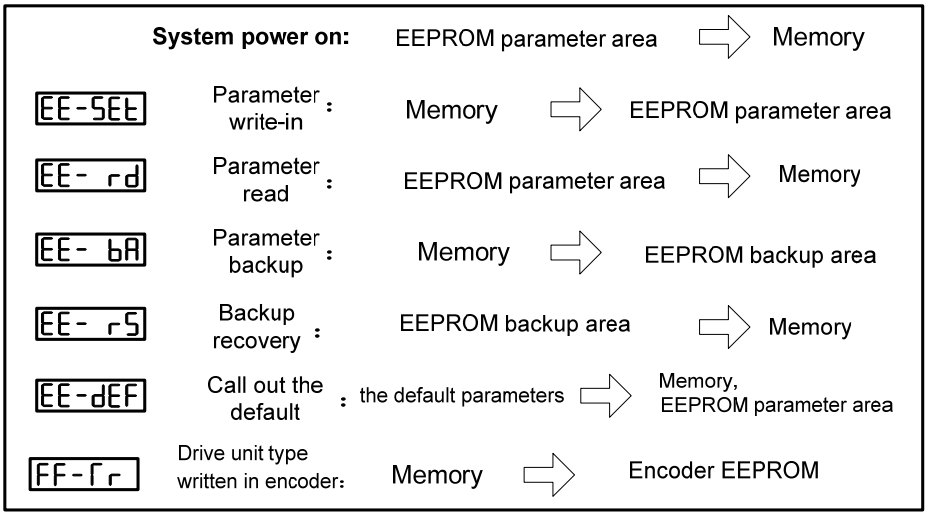

Fig. 6-8 Operating meaning of parameter management

- **If parameter writing is not executed, the modified parameters will not be saved after power off. In this case, the modification is invalid.**

6.5 Speed Trial Run

Note

- Perform speed trial run and JOG operation in no-load motors to prevent accidents.
- Drive SON (drive enabling) must be valid while CCW and CW drive prohibition must be invalid during trial run.

Select “Sr-” in the first layer, and press ↵ to enter speed trial mode. The prompt of speed trial run is “S” and the unit is r/min. Speed commands are input with keys and changed by ⮝ and ⮟ in

speed control mode, and the motor runs at the specified speed. Press ▲ to increase speed and press ▼ to decrease speed. When positive speed is displayed, the motor performs CW rotation; when negative speed is displayed, the motor performs CCW rotation.

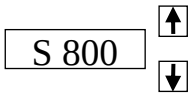

Fig. 6-9 Operating frame of speed trial mode

6.6 JOG Operation

Select “Jr-” in the first layer, then press ↵ to enter JOG operation mode. The prompt of JOG operation is “J” and the unit is r/min. The speed commands are input with keys in speed control mode. In JOG operation, the motor runs at JOG speed when ▲ is pressed and held while it stops and remains unchanged at zero speed when the button is released. JOG speed is set by parameter No. 21.

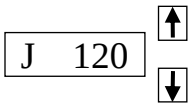

Fig. 6-10 Operating frame of JOG operation

6.7 Motor Test

Select “oL” in the first layer, and press ↵ to enter motor test mode. Its prompt is “r”and the unit is r/min. Position limit value is 268435456 pulses and the speed is set by parameter No.24 in position control mode. In motor test mode, the motor runs at tested speed by keeping ↵ for 2 seconds, stops and remains unchanged at zero speed by pressing ◄ for 2 seconds. Press ◄ to switch off the enable and exit motor test mode.

6.8 User Shortcut Password

User shortcut password is used for selecting password quickly to modify corresponding parameters. Select “PS-”in the first layer, then press ↵ to enter user shortcut password mode. Select one password mode (three modes in total) firstly with ▲and ▼, then press ↵ again to enter specific password values. Press ◄to return to the state of password mode selection.

- **PS—UEr** user password. The password is 315, which means the value of parameter No. 0 immediately turns to 315 in the operation. Corresponding parameters can be modified after the user exits the operation and returns to the parameter setting mode.
- **PS—CFS** control mode selection. The password value is 510, which means the value of parameter No. 0 immediately turns to 510 in the operation. Corresponding parameters can be modified after the user exits the operation and returns to the parameter setting mode.
- **PS—tPE** drive unit type selection. Its password is 385, which means the value of

parameter No. 0 immediately turns to 385 in the operation. Corresponding parameters can be modified after the user exits the operation and returns to the parameter setting mode.

6.9 Servo Parameter Auto Setting

The parameter auto setting newly developed by our company can identify system control models accurately, and find out a group of optimal parameters for servo control automatically and quickly according to different load inertia ratios. Compared with the manual setting for PID parameters, it saves lots of time and energy and has strong adaptability. Its operation procedures are as follows:

① After power supply is connected correctly, the upper computer starts to send enable signal to the servo drive unit and the signal remains enabled. When connecting the closed-loop system (CNC), shield the alarm of system (CNC) position deviation.

② Select “Au”in the first layer, press and hold ↵ for 3 seconds to enter auto setting mode of servo parameters. It is normal to see ±0.5 pitch oscillating back and forth on the machine at the moment. If the auto setting succeeds, the screen will display “FInISH”. The changes of parameter No.5 and No.6 can be checked by returning to “PA” with ◄. If another auto setting is needed, repeat procedure 2. If the auto setting fails, the screen will display “Err-17” (i.e., alarm No.17).

③ After the successful parameter auto setting, the set parameters are saved to the E2PROM storage location of the servo drive unit automatically and take effect immediately without power on again; if the set parameters are not the optimal ones, operators can fine tune the values of parameter No.5 and No.6. Please note that the parameters cannot be saved automatically at the moment, so parameter management “EE-SET” needs to be performed to save them. Refer to 6.4 for details.

6.10 Others

On-line adjustment for automatic gains is not provided currently, for it is under development.
Encoder zeroing function is for motor manufacturer, please do not use it.
Open-loop operation mode is for motor manufacturer, please do not use it.

CHAPTER 7 RUN

Note

- The driver and the motor must be grounded, and PE terminal of the driver must be connected to the grounding terminal of devices.
- The power supply of the driver is provided through an isolation transformer and a power supply filter to get better safety and anti-interference ability.
- The power supply is switched on after wiring is correctly completed.
- Connect to an emergent stop circuit to make the power supply stop immediately when there is a fault. (Refer to Fig. 7.1).
- After the driver alarms, it should be insured that the fault has been resolved and SON signal is invalid before startup again.
- Do not touch them in at least 5 minutes to avoid electric shock after the driver and motor are cut off.
- Prevent from being burned because the temperature will rise after the driver and motor run for a period of time.

7.1 Power Supply Connection

Refer to figure 7-1 for power supply connection. The connecting sequence is as follows:

1) Connect the power supply to the input terminal of the main circuit through an electromagnetism contactor (R, S and T for three phases, R and S for single phase).
2) Switch on the power supply of control circuit at the same time as or before switching on the one of main circuit. If only the power supply of the control circuit is switched on, the servo ready signal (SRDY) is OFF.
3) After the power supply of the main circuit is switched on and delays for 1.5s, the servo ready signal (SRDY) is ON. At this moment, the servo enable (SON) signal may be received. After valid servo enable is detected, the drive unit output is valid, and the motor is excited and running. When invalid servo enable is detected or an alarm occurs, the base electrode circuit is switched off and the motor is in free state.
4) When the servo enable and power supply are switched on together, the base electrode circuit will be switched on in about 1.5s.
5) Switching on and off the power supply frequently may damage the soft-starting circuit and energy consumption brake circuit, so the on-off frequency should be less than 5 times per hour or 30 times per day. If the drive motor unit and motor are overheated, 30-minute cooling is needed before the power supply is switched on again after troubleshooting.

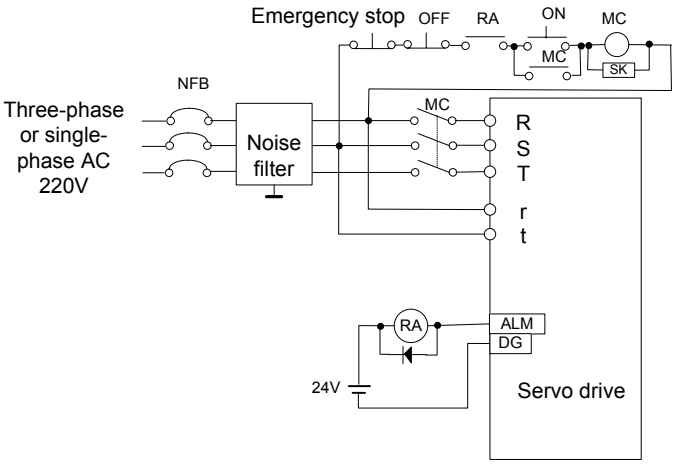

Fig. 7-1 wiring of power supply

Time sequence of power supply connection and alarm

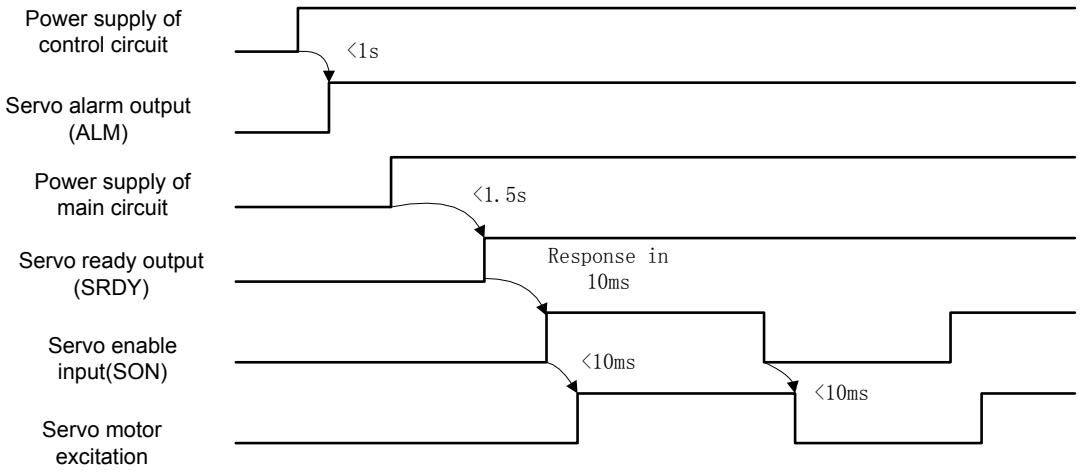

Fig. 7-2 Time sequence of power supply connection

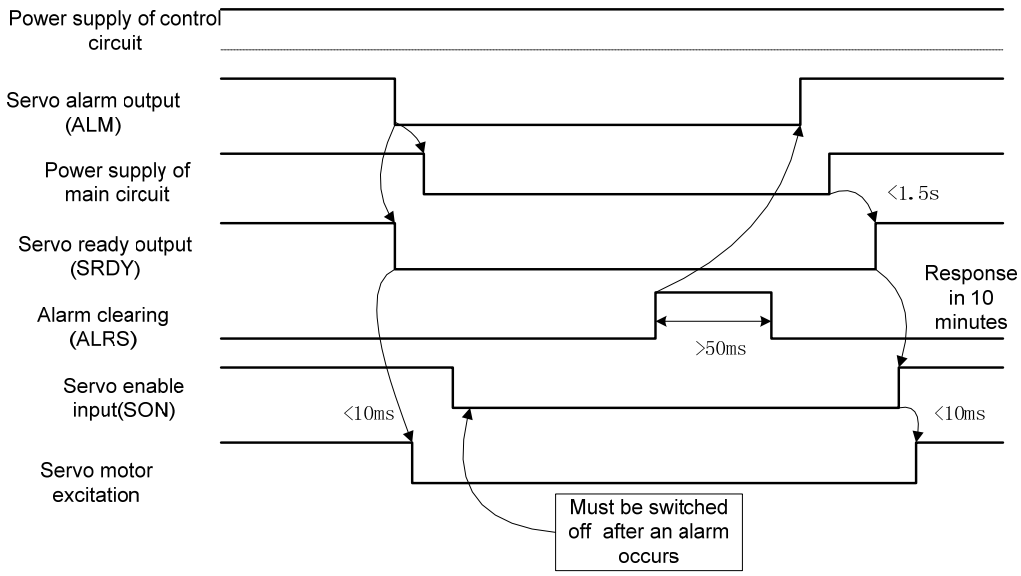

Fig.7-3 Time sequence of alarm

7.2 Trial Run

1） Check before running

Check the following items before power on after installation and wiring:

- Whether the TB wiring of the power supply and reliable input voltage are correct
- Whether the power line and motor line are short circuited or grounded
- Whether the connection of encoder cables is correct.
- Whether the connection of the control signal terminal and the polarity as well as the size of the power supply are correct.
- Whether the drive unit and motor are fixed tightly.
- Whether the motor shaft is connected to the load.

2） Trial run after power on

（1） Trial run mode

① Connect to CN1 to make servo enable (SON) OFF, CCW drive prohibition (FSTP) ON and CW drive prohibition (RSTP) ON.

② Please check the wiring if an alarm occurs after the power supply of the control circuit (no connection for main circuit) is connected and the display of the drive unit is switched on.

③ Set the control mode selection (parameter No.4) to the speed trial run mode (set to 2).

④ Switch on the power supply of the main circuit.

⑤ After confirming that no alarm or abnormality occurs, make the servo enable (SON) ON. Then the motor is excited and in zero seed state.

⑥ Press keys to enter speed trial mode. Its prompt is “S“and the unit is r/min. When the system is in speed control mode, speed commands are input by keys. Press ▲ and ▼ to change the commands, then the motor runs at the specified speed.

（2） JOG run

① Connect to CN1 to make servo enable (SON) OFF, CCW drive prohibition (FSTP) ON and CW drive prohibition (RSTP) ON.

② Please check the wiring if an alarm occurs after the power supply of control circuit (no connection for main circuit) is connected and the display of the drive unit is switched on.

③ Set the control mode selection (parameter No.4) to JOG mode (set to 3).

④ Switch on the power supply of main circuit.

⑤ If there is no alarm or abnormality, make the servo enable (SON) ON. Then the motor is excited and in zero seed state.

⑥ Press keys to enter JOG run mode. The prompt and unit of the mode are “J” and r/min respectively. When the system is in the speed control mode, the speed and direction are decided by parameter No. 21. Press ▲ to make the motor run at the speed and in the direction decided by No.21, while press ▼ to make the motor run in negative direction at specified speed.

（3）Position control mode operation

① Connect to CN1 to make servo enable (SON) OFF, CCW drive prohibition (FSTP) ON and CW drive prohibition (RSTP) ON.

② Please check the wiring if an alarm occurs after the power supply of control circuit (no connection for main circuit) is connected and the display of drive unit is switched on.

③ Set the control mode selection (parameter No.4) to position running mode (set to 0). Set

parameter No.14 and electronic gear ratio （No.12，No.13）according to controller output signal mode.

④ Switch on the power supply of the main circuit.

⑤ If there is no alarm or abnormality, make the servo enable (SON) ON. At this moment, the motor is excited and in zero-speed state.

⑥ Operate the position controller to output signals to drive pins CN1-6, CN1-18, CN1-7 and CN1-19, making the motor runs according to commands.

（4）Speed control mode operation

The speed operation mode consists of the speed control of external analog voltage and the speed control of internal speed.

Speed control mode of external analog voltage:

① Connect to CN1 to make servo enable (SON) ON, CCW drive prohibition (FSTP) ON, CW drive prohibition (RSTP) ON.

② Please check the wiring if an alarm occurs after the power supply of the control circuit (no connection for main circuit) is connected and the display of the drive unit is switched on.

③ Set the control mode selection (parameter No.4) to the speed running mode (set to 1), and set parameter No. 43 to 1.

④ Switch on the power supply of the main circuit.

⑤ If there is no alarm or abnormality, make the servo enable (SON) ON. At this moment, the motor is excited and in the running state that the speed is controlled by the external analog voltage.

Analog speed zeroing: 1) Set PA49 to 1;
2) Shift the display to”DP-SPD”;
3) Observe the current speed: If the direction is clockwise, adjust the value of PA44 to a bigger one; if the direction is counterclockwise, adjust the value to a smaller one till the speed is displayed as”R-0”.
4) Set parameter No.49 to 0;
5) Shift the display to”DP-POS”;
6) Observe the current position: if it is increasing, adjust the value of PA45 to a bigger one, if it is decreasing, adjust the value to a smaller one till the position value is stable.

⑥ Chang the external analog voltage to change the motor speed, and change the direction of the analog voltage to change the rotation direction of the motor

Note: In speed control mode, even if the analog command voltage sends 0V command, the motor will still rotates at very low speed. At this moment, it needs to adjust the amplifier zero.

Two kinds of internal speed control:

① Connect CN1 to make servo enable (SON) OFF, speed selection (SC1) OFF, speed selection 2 (SC2) OFF, CCW drive prohibition (FSTP) ON and CW drive prohibition (RSTP) ON.

② Please check the wiring if an alarm occurs after the power supply of the control circuit (no connection for main circuit) is connected and the display of the drive unit is switched on.

③Set the control mode selection (parameter No.4) to the speed running mode (set to 1), and set parameter No. 43 to 0. In addition, set speed parameter No.24～No.27as needed.

④ Switch on the power supply of the main circuit.

⑤If there is no alarm or abnormality, make servo enable (SON) ON. At this moment, the motor is excited and runs at internal speed 1.

⑥Change the state of input signals SC1 and SC2 to make the motor run at the specified speed.

7.3 Adjustment

Note

- Incorrect parameter setting may cause equipment fault and accidents, please ensure the parameters are correct before starting the equipment.
- Perform no-load adjustment before load adjustment.

1）Basic gain adjustment

（1）Speed control

① The setting value of [speed proportional gain] (parameter No. 5): the value should be set as big as possible under the condition of no vibration. In general, the bigger the load inertia is, the bigger the value is.

②The setting value of [speed integration time constant] (parameter No.6): the value should be as small as possible according to given conditions. If the value is too small, the response speed will increase, but vibration will occur too. Therefore, set the value as small as possible under the condition of no vibration. If the value is too big, the speed may change significantly with the load.

（2）Position control

① Set proper [speed proportion gain] and [speed integration time constant] following the above methods.

② Set [position feedforward gain] (parameter No. 10) to 0%.

③The setting value of [position proportion gain] (parameter No.9): the value should be set as big as possible within a stable range. A too big value leads to good track characteristics of position commands and small lag error, but also causes vibration easily when the positioning is stopped.

④Increase the setting value of [position feedforward gain] if particularly high position track characteristics are needed, but an extremely big value will cause overshoot.

Note: a small setting value of the position proportion gain leads to a stable state for the system, but also causes bad position track and big lag error.

2）Basic parameter adjustment

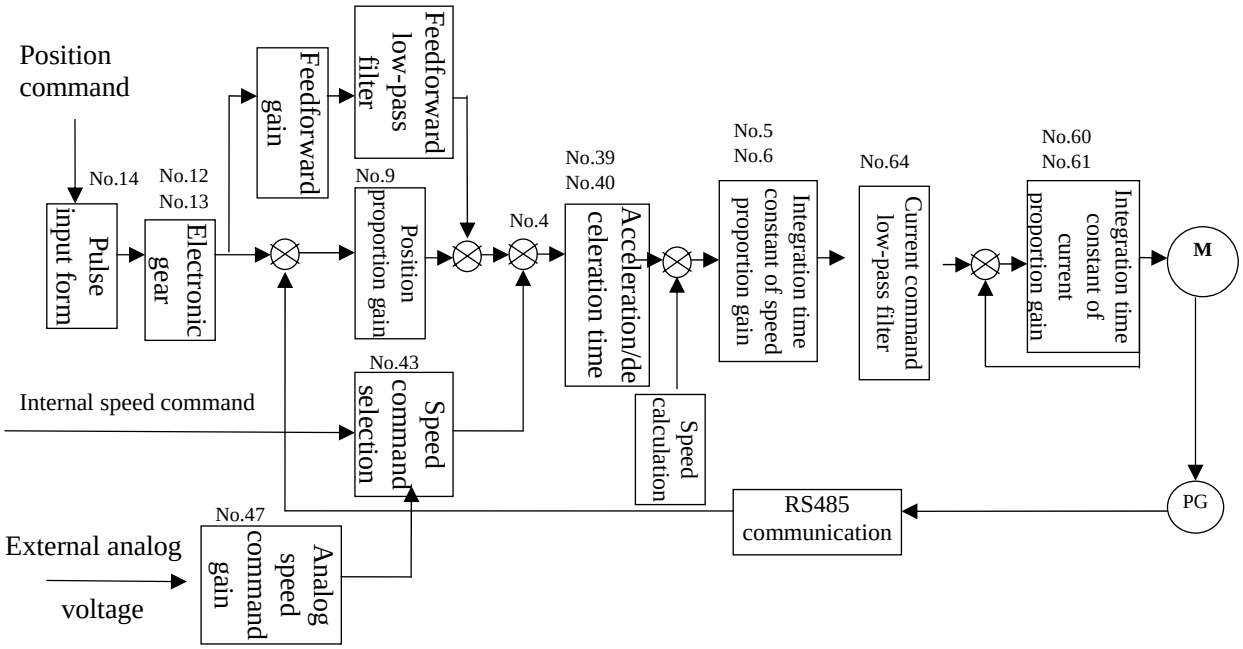

Fig. 7-4 Adjustment for basic parameter

3）Setting for position resolution and electronic gear

Position resolution (one pulse travel △l) is decided by travel △S per revolution of the servo motor and feedback pulse Pt per revolution of the encoder. It can be expressed as follows:

$$\triangle l=\frac{\Delta S}{Pt}$$

In the expression,

△l：one pulse travel（mm）;

△S：travel per revolution of the servo motor（mm/r） ;

Pt：feedback pulse number per revolution of the encoder（p/r）.

Pt=131072p/r due to the servo motor with a17-bit absolute encoder.

Command pulse converts to position control pulse by multiplying electronic gear ration G, so one command pulse travel △l * is expressed as follows:

$$\triangle l^{*}=\frac{\Delta S}{Pt}\times G$$

In the expression, $G=\frac{\text{command pulse frequency division numerator}}{\text{command pulse frequency division denominator}}$

CHAPTER 8 PRODUCT SPECIFICATION

Attentions

- The servo drive unit shall be purchased with its matching servo motor. This manual introduces the conditions that GSK SJT series motors are matched.
- Please note on the order if you want to use servomotors of other manufacturers.

8.1 Specifications of Drive Unit

Table 8-1 Specifications of DAH series servo drive unit

Adaptive motor capacity		0.1kW～6kW
Input power supply	Main circuit	Single-phase or three- phase AC（0.85～1.1）×220V 50Hz/60Hz
	Control loop	Single-phase AC（0.85～1.1）×220V 50Hz/60Hz
Control mode		Three-phase full-wave rectification IGBT PWM sine-wave driving
Feedback mode		17-bit absolute encoder
Working environment	Temperature	Operation temperature: 0℃～+40℃ Storage temperature：-40℃～+70℃
	Humidity	Less than 90%（No dewing）
	vibration/impact resistance	Less than 0.5G（4.9m/s^2）/10Hz～60Hz (Discontinuous movement)
Speed control mode	Scope of speed control (base on the condition that locked rotor is not happened at rated load)	1: 60000
	Speed change rate	0～100% Load:±0.01％ Rated voltage ±10%:±0.01％
	Speed frequency response	≥200Hz
	Acceleration and deceleration time	0～10s
	External speed command input	±10V input voltage
	Internal speed setting function	4 kinds of speed can be set inside
	Input impedance	20kΩ
Position control mode	Max. pulse input frequency	0～6.5536M(Hz)
	Type of input pulse	1. Direction + Pulse 2.CCW+CW pulse series 3.90° pulse difference two-phase pulse. Any of them can be selected.
	Form of input pulse	1. Differential input 2. Open collector input
	Electronic gear ratio	1< α/β <32767

	Position signal output	1. A phase, B phase, Z phase differential output. 2. Open collector output Z phase
I/O Signal	Control input signal	① Servo enable ② Alarm clearing ③CCW drive prohibition ④CW drive prohibition ⑤Deviation counter clearing/speed selection 1 ⑥Command pulse prohibition/speed selection 2 ⑦ Zero speed clamping
	Control output signal	①Servo ready output ②Servo alarm output ③Positioning finish output/speed arrival output ④Brake output
Inside	Communication function	GSK-LINK communication mode. Max. connection number:254 axes Data transmission rate: 100Mbit/s
Functions	High performance functions	1. A high resolution encoder is used to get more stable performance. Stable mechanical performance is realized. 2. A16-bit high-precision A/D conversion chip is adopted to achieve high-precision closed loop control. The number of feedback pulse can be adjusted freely. （≤32768）. 3. Motor type automatic recognition function. 4. In the bus communication mode, the servo parameters upload and download online, servo diagnostic information feedback and servo alarm monitoring can be realized. 5. In bus communication mode, the functions that work piece coordinate system power-off memory and no stroke switch zero return can be realized. 6. Control model identification and parameter auto-setting function.
	Regenerative braking	Built-in
	Frequency dividing output of encoder signals	Adjustable frequency division Pulse output: 16～32768(pulse/rev)
	Protection function	Over speed, main power source overvoltage, power module fault, under voltage, over current, over load, over heating, braking abnormal, encoder abnormal, encoder communication fault, invalid motor type setting, control power source abnormal, position deviation, etc.
	Monitoring function	Motor speed, pulse number of the current position, pulse number of position command, position deviation, motor torque, motor current, linear speed, absolute position of the rotor, pulse frequency of the command, operation state, input/output terminal signal, current given voltage, etc.
	Display, Operation	6-digit LED, 4 buttons

8.2 Servo Motor Specification

1） Product introduction

GSK SJT series 3-phase AC permanent magnet synchronous motor has the following technical characteristics:

- New-type rare earth is used, output power is big.
- The motor with well low-speed characteristic, speed regulation ratio >1:10000.
- Dielectric strength and insulation resistance are high and safe.
- Strong overload capacity, instantaneous torque is about 8 times the value of the rated torque.

2） Terminal instruction

（1） SJT series motor winding

3-phase winding U, V, W of the motor and earth wire of the motor shell are led out by a 4-core plug-in connector. See table 1 for its corresponding relationships. U, V, W and earth wire of the motor shell are respectively connected to terminals U, V, W and PE of drive unit main circuit.

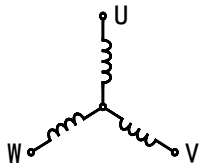

Table 8-2 Motor wiring table

Motor wire	U	V	W	Shell （earth wire）
Plug No.	2	3	4	1

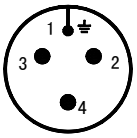

Contact（weld point） diagram

The wire of photoelectric encoder is led out through a 15-core plug-in connector. See 8-3 for its corresponding relationships. The led out wires are connected to the plug of drive unit feedback signal CN2 according to requirements of the drive unit.

Table 8-3 Encoder wiring table

Encoder wire	Shell （earth wire）	$\overline{SD}$	GND		VCC	SD		
Plug No.	1	2	3	4	5	6	7	8
Encoder wire					VB			
Plug No.	9	10	11	12	13	14	15	

3) Servo motor technical specifications

Table 8-4 Specifications of SJT series motor with absolute encoder

Type	**Power**(kW)	Pole-pairs	Zero-speed torque (N.m)	Rated rotary speed (r/min)	Rated current (A)	Rotor inertial (kg.m^2)	Working voltage (unit：V)
80SJT-M024C(A4)	0.5	4	2.4	2000	3	0.83×10^{-4}	AC 3-phase 220
80SJT-M024E(A4)	0.75	4	2.4	3000	4.8	0.83×10^{-4}	AC 3-phase 220
80SJT-M032C(A4)	0.66	4	3.2	2000	5	1.23×10^{-4}	AC 3-phase 220
80SJT-M032E(A4)	1.0	4	3.2	3000	6.2	1.23×10^{-4}	AC 3-phase 220
110SJT-M040D(A4)	1.0	4	4	2500	4.5	6.8×10^{-4}	AC 3-phase 220
110SJT-M060D(A4)	1.5	4	6	2500	7.0	9.5×10^{-4}	AC 3-phase 220
130SJT-M040D(A4)	1.0	4	4	2500	4.0	1.19×10^{-3}	AC 3-phase 220
130SJT-M050D(A4)	1.3	4	5	2500	5.0	1.19×10^{-3}	AC 3-phase 220
130SJT-M060D(A4)	1.5	4	6	2500	6.0	1.95×10^{-3}	AC 3-phase 220
130SJT-M075D(A4)	1.88	4	7.5	2500	7.5	1.95×10^{-3}	AC 3-phase 220
130SJT-M100B(A4)	1.5	4	10	1500	6.0	2.42×10^{-3}	AC 3-phase 220
130SJT-M100D(A4)	2.5	4	10	2500	10.0	2.42×10^{-3}	AC 3-phase 220
130SJT-M150B(A4)	2.3	4	15	1500	8.5	3.1×10^{-3}	AC 3-phase 220
130SJT-M150D(A4)	3.9	4	15	2500	14	3.6×10^{-3}	AC 3-phase 220
175SJT-M180B(A4)	2.8	3	18	1500	15	6.5×10^{-3}	AC 3-phase 220
175SJT-M180D(A4)	3.8	3	18	2500	16.5	6.5×10^{-3}	AC 3-phase 220
175SJT-M220B(A4)	3.5	3	22	1500	17.5	9×10^{-3}	AC 3-phase 220
175SJT-M220D(A4)	4.5	3	22	2500	19	9×10^{-3}	AC 3-phase 220
175SJT-M300B(A4)	3.8	3	30	1500	24	11.2×10^{-3}	AC 3-phase 220
175SJT-M300D(A4)	6	3	30	2500	27.5	11.2×10^{-3}	AC 3-phase 220

Note 1: Please mark on the order if you order a motor with power-off brake.

Note 2: In the above table, the number in the brackets of the rated current column is the rated current of high voltage.

3） Overall size

(1) Contour and installation size of 80SJT series AC servo motor

Industry (aviation) Socket type →

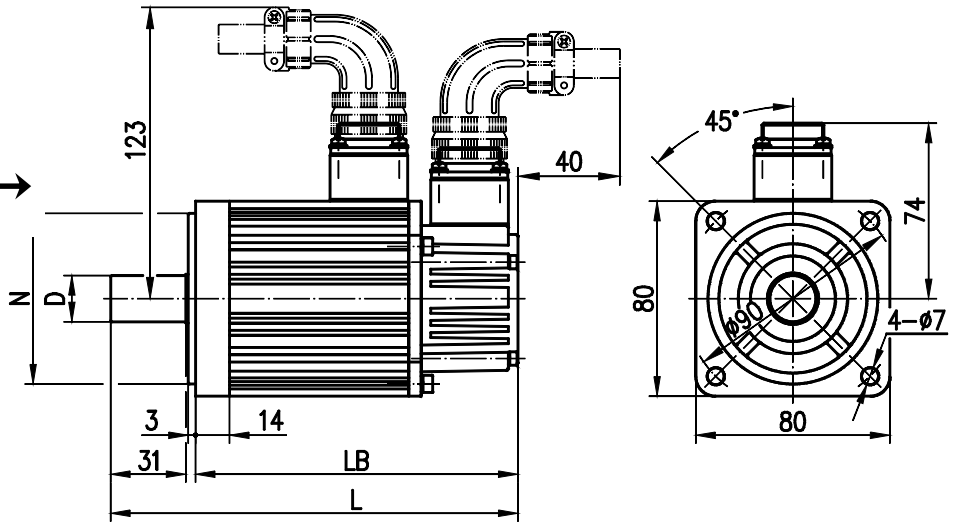

Cable type →

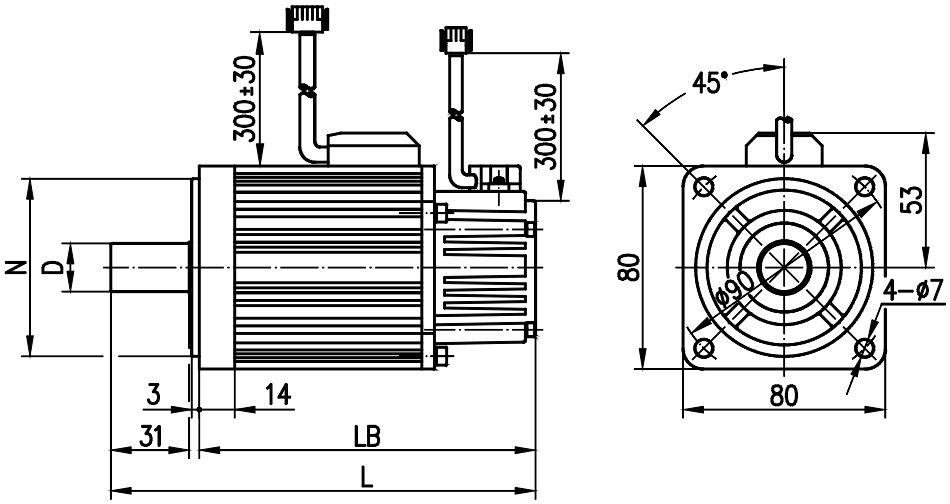

Type	D(mm)	N(mm)	LB(mm)	L(mm)
80SJT—M024C（A4）	$\varphi 19^{0}_{-0.013}$	$\varphi 70^{0}_{-0.03}$	163	198
80SJT—M024E（A4）	$\varphi 19^{0}_{-0.013}$	$\varphi 70^{0}_{-0.03}$	163	198
80SJT—M032C（A4）	$\varphi 19^{0}_{-0.013}$	$\varphi 70^{0}_{-0.03}$	181	216
80SJT—M032E（A4）	$\varphi 19^{0}_{-0.013}$	$\varphi 70^{0}_{-0.03}$	181	216

(2) Contour and installation size of 110SJT series AC servo motor

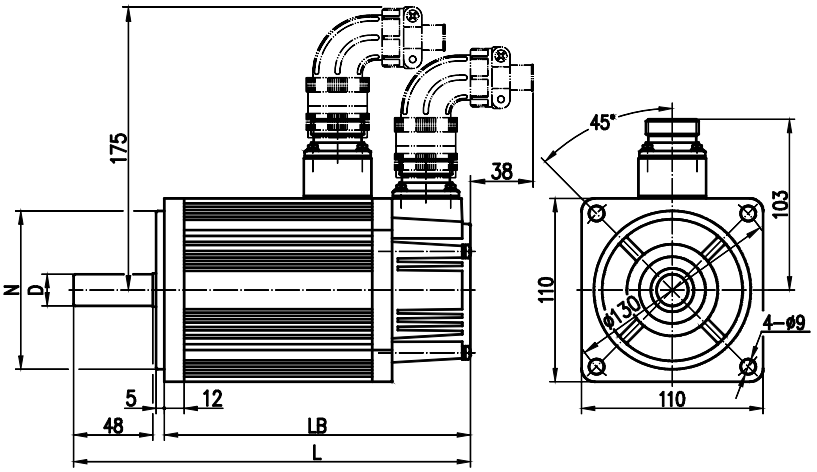

Type	D(mm)	N(mm)	LB(mm)	L(mm)
110SJT—M040D（A4）	$\varphi 19^{0}_{-0.013}$	$\varphi 95^{0}_{-0.035}$	186 (237)	241 (292)
110SJT—M040E（A4）	$\varphi 19^{0}_{-0.013}$	$\varphi 95^{0}_{-0.035}$	186 (237)	241 (292)
110SJT—M060D（A4）	$\varphi 19^{0}_{-0.013}$	$\varphi 95^{0}_{-0.035}$	212 (263)	267 (318)
110SJT—M060E（A4）	$\varphi 19^{0}_{-0.013}$	$\varphi 95^{0}_{-0.035}$	212 (263)	267 (318)
Note：LB and L in brackets are the length of the corresponding motor with power-off brake.				

(3) Contour and installation size of 130SJT series AC servo motor

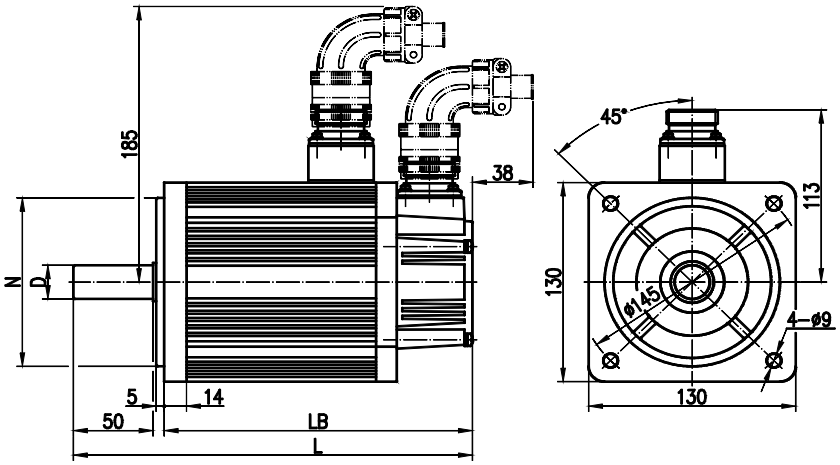

Type	D(mm)	N(mm)	LB(mm)	L(mm)
130SJT—M040D（A4）	$\varphi 22^{0}_{-0.013}$	$\varphi 110^{0}_{-0.035}$	168 (227)	225 (284)
130SJT—M050D（A4）	$\varphi 22^{0}_{-0.013}$	$\varphi 110^{0}_{-0.035}$	168 (227)	225 (284)
130SJT—M060D（A4）	$\varphi 22^{0}_{-0.013}$	$\varphi 110^{0}_{-0.035}$	176 (235)	233 (292)
130SJT—M075D（A4）	$\varphi 22^{0}_{-0.013}$	$\varphi 110^{0}_{-0.035}$	188 (247)	245 (304)
130SJT—M100B（A4）	$\varphi 22^{0}_{-0.013}$	$\varphi 110^{0}_{-0.035}$	208 (267)	265 (324)
130SJT—M100D（A4）	$\varphi 22^{0}_{-0.013}$	$\varphi 110^{0}_{-0.035}$	208 (267)	265 (324)
130SJT—M150B（A4）	$\varphi 22^{0}_{-0.013}$	$\varphi 110^{0}_{-0.035}$	238 (297)	295 (354)
130SJT—M150D（A4）	$\varphi 22^{0}_{-0.013}$	$\varphi 110^{0}_{-0.035}$	248 (307)	305 (364)
Note：LB and L in brackets are the length of the corresponding motor with power-off brake.				

(4) Contour and installation size of 175SJT series AC servo motor

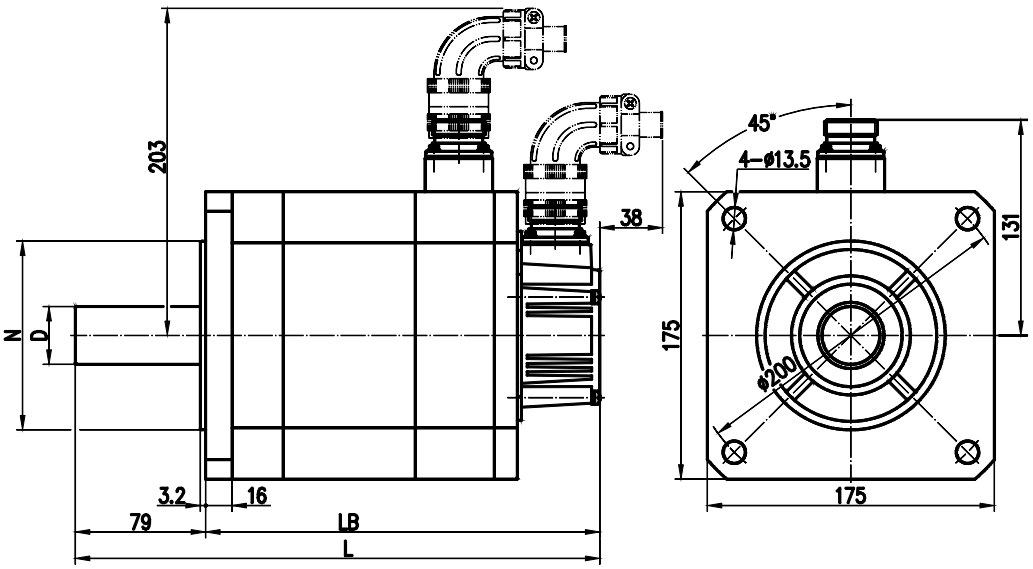

Type	D(mm)	N(mm)	LB(mm)	L(mm)
175SJT—M150D（A4）	$\varphi 35_{0}^{+0.01}$	$\varphi 114.3^{0}_{-0.025}$	224 (291)	303 (370)
175SJT—M180B（A4）	$\varphi 35_{0}^{+0.01}$	$\varphi 114.3^{0}_{-0.025}$	244 (311)	323 (390)
175SJT—M180D（A4）	$\varphi 35_{0}^{+0.01}$	$\varphi 114.3^{0}_{-0.025}$	244 (311)	323 (390)
175SJT—M220B（A4）	$\varphi 35_{0}^{+0.01}$	$\varphi 114.3^{0}_{-0.025}$	279 (346)	358 (425)
175SJT—M220D（A4）	$\varphi 35_{0}^{+0.01}$	$\varphi 114.3^{0}_{-0.025}$	279 (346)	358 (425)
175SJT—M300B（A4）	$\varphi 35_{0}^{+0.01}$	$\varphi 114.3^{0}_{-0.025}$	309 (382)	388 (461)
175SJT—M300D（A4）	$\varphi 35_{0}^{+0.01}$	$\varphi 114.3^{0}_{-0.025}$	309 (382)	388 (461)
Note：LB and L in brackets are the length of the corresponding motor with power-off brake.				

8.3 Isolation Transformer

Note

- It is recommended that isolation transformer supplies power to drive unit to reduce the possibilities of electric shock and interference from power or electromagnetic field.
- 0.8 kW and the below drive unit adopt single-phase power supply, and the ones above 0.8 kW shall adopt three-phase power supply.

Our company provides the following types of isolation transformers for user selection. User shall select it according to the power and actual load factor of the servo motor.

Table 8-5 Specifications of the isolation transformer

Type	Capacity（kVA）	Phase	Input voltage(V)	Output voltage(V)
BS—120	1.2	Three-phase	380	220
BS—200	2.0			
BS—300	3.0			
BS—400	4.0			
BD—80	0.8	Single-phase		
BD—120	1.2			

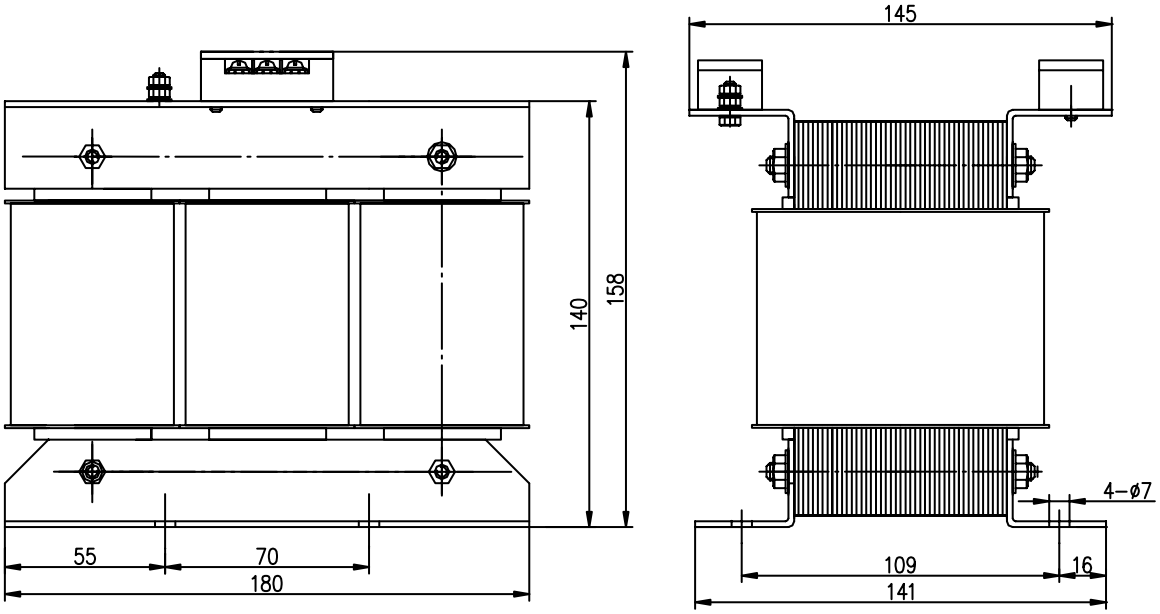

Fig.8-8 Exterior and installation dimension of BS—120

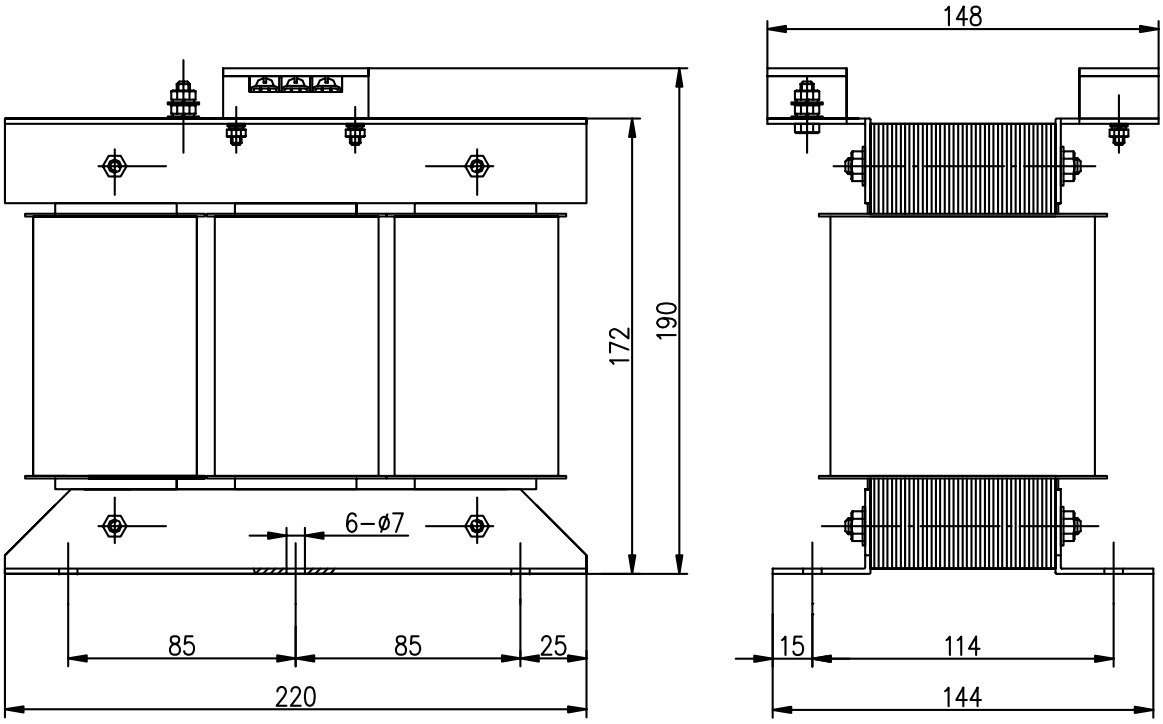

Fig.8-9 Exterior and installation dimension of BS—200

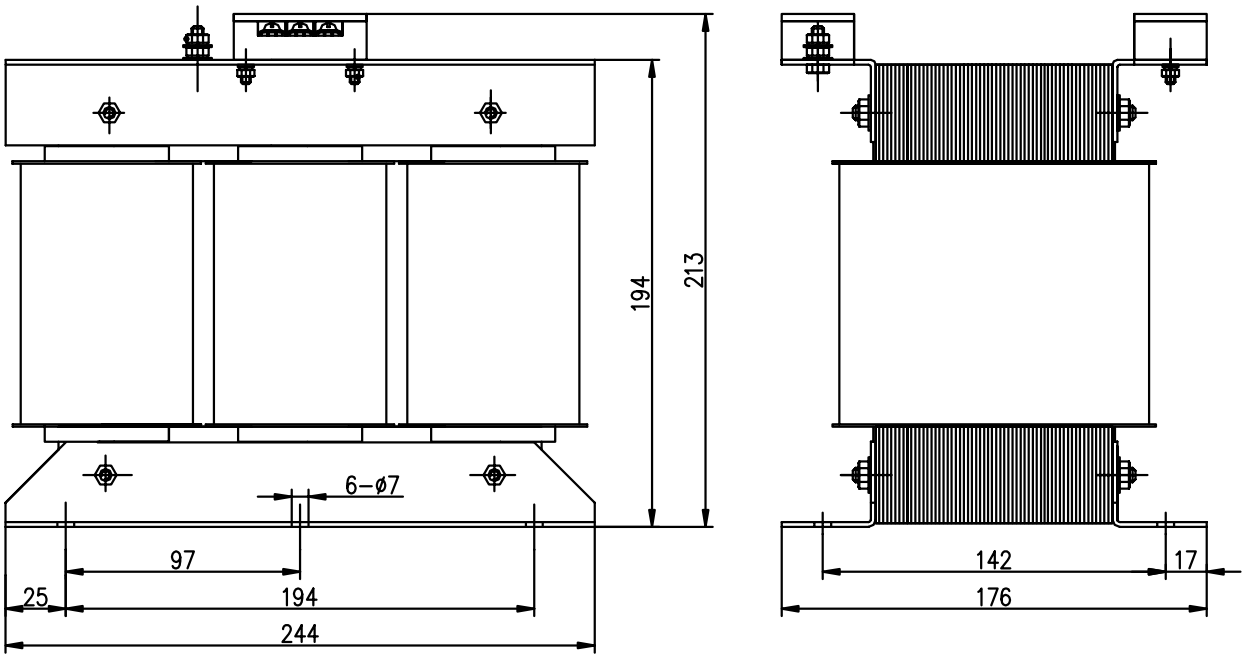

Fig. 8-10 Exterior and installation dimension of BS—300

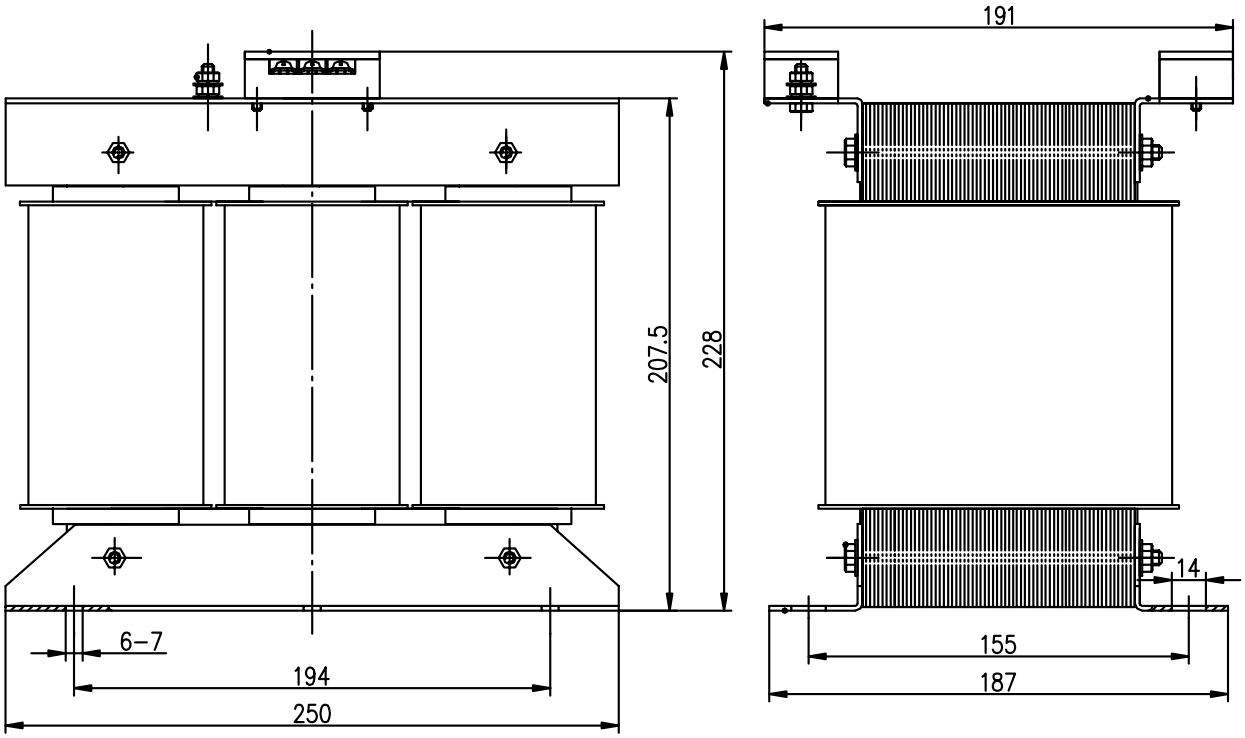

Fig.8-11 Exterior and installation dimension of BS—400

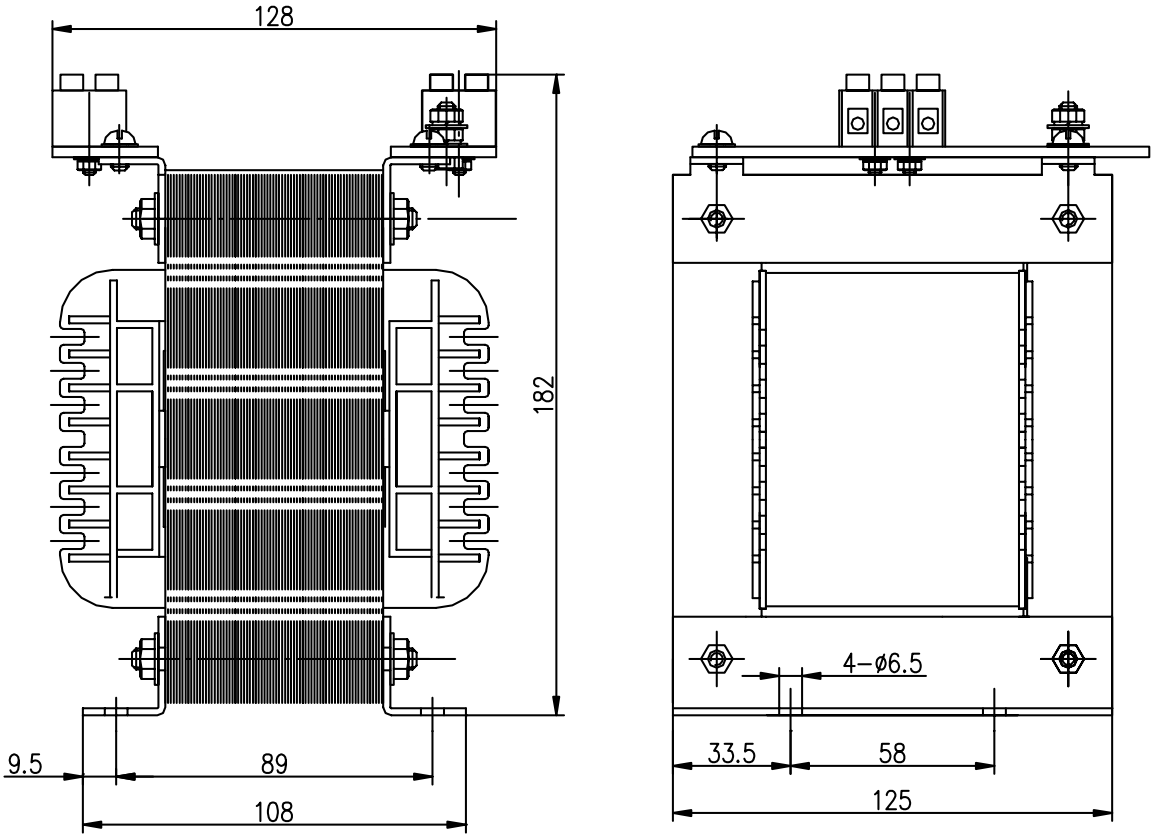

Fig. 8-12 Exterior and installation dimension of BD—80

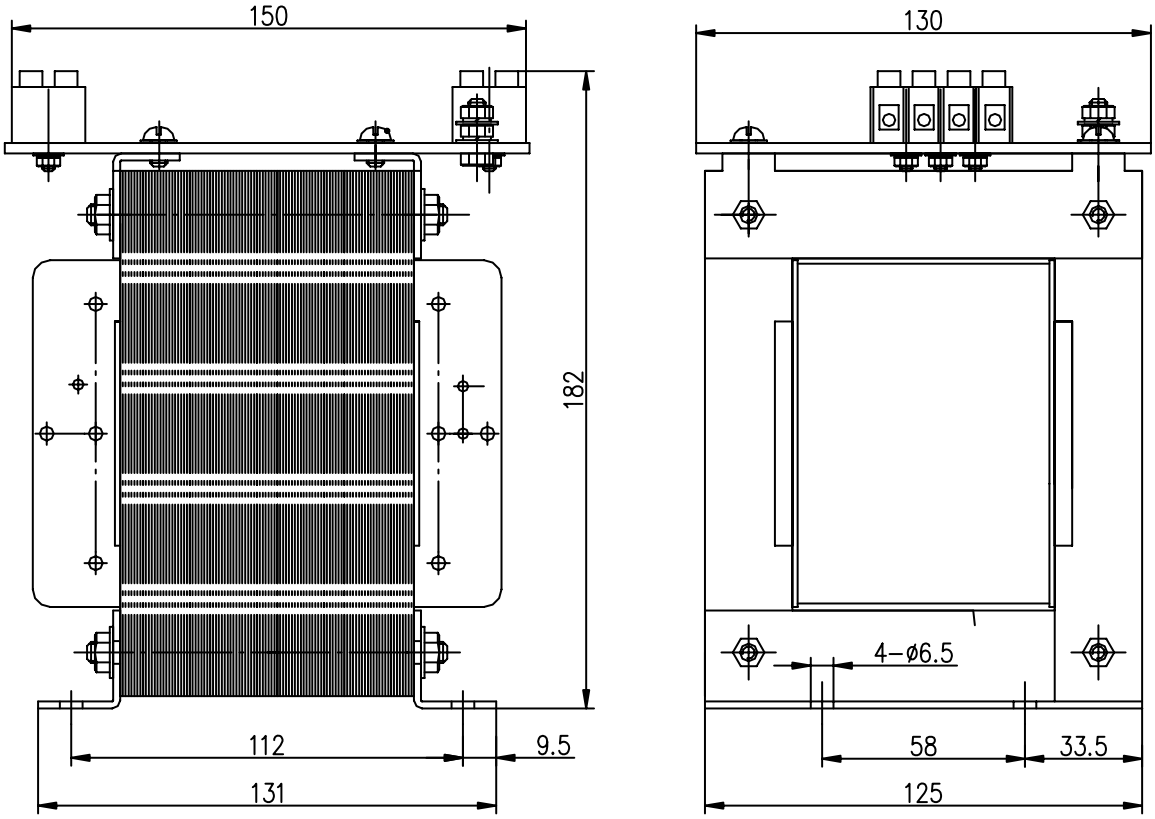

Fig.8-13 Exterior and installation dimension of BD—120

Chapter 9 ORDER INSTRUCTION

9.1 Capacity Selection

Determination of the drive unit capacity shall base on an overall consideration of the following factors: load inertia, load torque, required positioning accuracy and required maximum speed. Take the following steps into consideration before determining the capacity:

1）Load inertia and torque calculation

① Torque calculation Load torque is caused by the friction and cutting force of the drive system.

$$2\pi M = FL$$

M —— Motor shaft torque

F —— Required force to move the mechanical parts in a straight line

L —— Moved distance of the machine when the motor rotates once（2πrad）

2πM is the work of motor when the motor rotates once with torque M. FL is mechanical work when L (distance) is moved by force F. On machine tool, because the factors of transmission efficiency and friction coefficient exist, required torque for ballscrew to do uniform motion by overcoming the external load P is as follows:

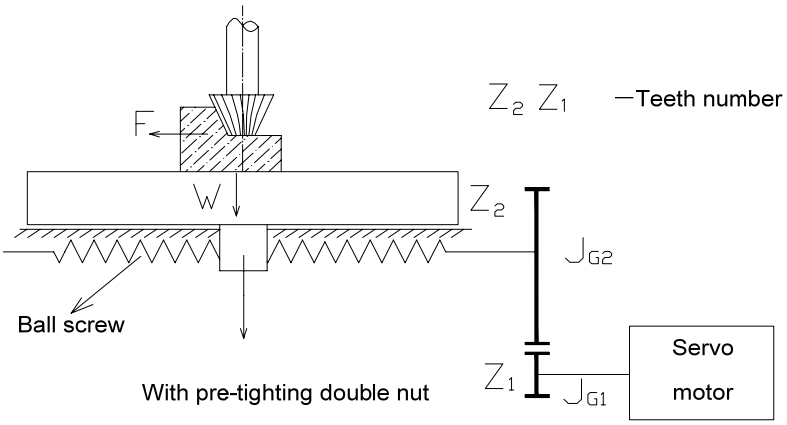

Sample of servo feeding drive system

Calculation formulas:

$$M_1 = \left(K\frac{F_{a0}\,h_{sp}}{2\pi} + \frac{P\,h_{sp}}{2\pi\eta_1} + M_B\right)\frac{Z_1}{Z_2}$$

M_1 —— Driving torque during uniform movement（N•mm）;

$K\frac{F_{a0}\,h_{sp}}{2\pi}$ —— Pre-tightening torque of double nut ball screw（N•mm）;

F_{a0} —— Pre-tightening force （N）, generally , pre-tightening force is 1/3 of max. axial work load F_{maz} , that is to say, F_{a0} ＝1/3$F_{maz.}$ When F_{maz} is difficult to calculate, the formula F_{a0} ＝（0.1~0.12）C_a (N) can be used.

C_a —— Rated load of ball screw pair, which can be found in product samples

h_{sp} —— Screw lead (mm);

K —— The scope of pretightening torque coefficient of ball screw is 0.1～0.2;

P —— External load （N）that is added to screw axial，P＝F＋μW;

F —— Cutting force（N） acting on screw axial

W —— Normal load（N），$W=W_1+P_1$；

W1 —— Movable parts gravity (N), including maximum bearing gravity；

P1 —— Clamping force of splint (such as spindle box)；

μ —— Friction coefficient of lead rail, sliding lead rail pair with polyfluortetraethylene plate μ=0.09. When lubricating is available, μ=0.03～0.05, linear sliding lead rail μ=0.003～0.004；

η1 —— The scope of ball screw efficiency is 0.90～0.95；

MB —— Friction torque for supporting the bearing, which is also called starting torque, can be found in special-purpose bearing samples of ball screw；

z_1 —— Teeth number of the gear 1；

z_2 —— Teeth number of the gear 2。

Finally, select servo motor according to the conditions satisfying the following formula: $M_1 \leq Ms$ M in the formula is rotated torque of the servo motor.

②Inertia matching calculation

Usually between motor inertia J_M, load inertia J_L (convert to motor axis) or total inertia J_r, the following relationships are recommended: $\frac{1}{4} \leq \frac{J_L}{J_M} \leq 1$ or $0.5 \leq \frac{J_M}{J_r} \leq 0.8$ or $0.2 \leq \frac{J_L}{J_r} \leq 0.5$

Rotor inertia J_M of the motor can be found in product sample or manual. Here is a brief introduction to the method for calculating load inertia:

1. Inertia of rotary parts ball screw, shaft coupling, gear and notched belt pulley belong to rotary parts.

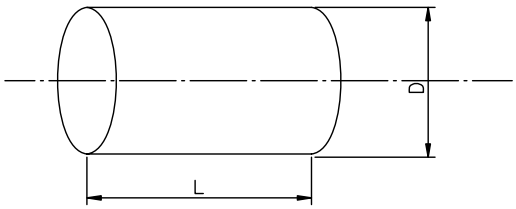

$$J=\frac{\pi\gamma}{32\times g}D^4L(kg\cdot m^2)$$

γ —— Material density of rotary parts ($kg\cdot m^2$)；

D —— Diameter of rotary parts（cm）；

L —— Length of rotary parts（cm）；

g —— Acceleration of gravity，g=980cm/s^2。

2、Inertia of linear motion objects

$$J=\frac{W}{g}\left(\frac{L}{2\pi}\right)^2 \quad (kg\cdot m^2)$$

W —— Gravity of linear motion objects（N）；

L —— Moved distance （cm） of objects when the motor rotates once. If the motor is directly connected to the screw, and L is equal to the screw lead.

3. Inertia that is converted to motor shaft during the decelerate transmission. Inertia that is converted to motor shaft during gear and notched belt transmission deceleration.

$$J = J_0 \left(\frac{z_1}{z_2}\right)^2$$

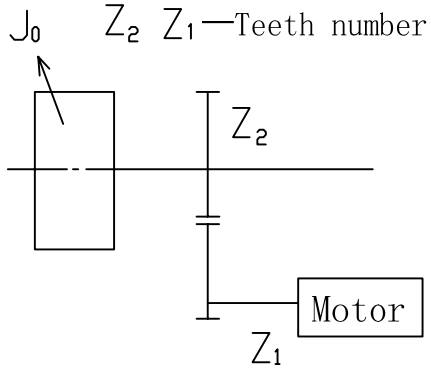

Please refer to the chart for load inertia calculation. The load inertia J_L converted to motor shaft is:

$$J_L = J_{G1} + \left(\frac{z_1}{z_2}\right)^2 \left[(J_{G2} + J_S) + \frac{W}{g} \left(\frac{L}{2\pi}\right)^2 \right] \text{ (kg•m}^2\text{)}$$

J_{G1} —— Inertia of the gear 1 (kg•m^2);

J_{G2} ——Inertia of the gear 2 (kg•m^2);

J_S —— Inertia of the ball screw (kg•m^2)。

③Calculation of the maximum torque during positioning acceleration

$$M = \frac{2\pi n_m}{60 t_a} (J_M + J_L) + M_L$$

n_m —— Rotate speed of the fast-moving motor（r /min）

t_a —— Acceleration/deceleration time（s）, According to $t_a \approx 3 / K_S$, choose 150 ms～200ms

K_S —— The scope of system open-loop gain is $8s^{-1}$～$25s^{-1}$. Usually choose $K_S = 20s^{-1}$ for machining center

M_L —— Load torque （N•m）

2) Preliminarily define the mechanical gear ratio

Maximum mechanical reduction ratio can be calculated by required maximum speed and maximum motor speed. Use the reduction ratio and minimum revolving unit to calculate whether the requirements of minimum position unit can be satisfied. If it requires high position accuracy, increase mechanical reduction ratio (actual maximum speed decreases) or select motor with faster rotate speed.

3) Calculation of inertia and torque

Convert load inertia and load torque to motor shaft by using mechanical reduction ratio. Converted inertia should be no greater than 5 times of motor rotor inertia. Converted load torque and effective torque should be no greater than motor rated torque. If it does not meet the above demands, increase mechanical reduction ratio (actual maximum speed decreases) or select motor with larger capacities.

9.2 Electronic gear ratio

For significances of electronic gear ratio, adjustment methods, please refer to chapter 4 (table 4-2 parameter function), chapter 6 (6.3 parameter setting), chapter 7 (7.3 adjustment).

In position control mode, actual load speed is:

Instruction pulse speed ×G ×mechanical reduction ratio

In position control mode, actual minimum displacement of load is:

Minimum instruction pulse stroke ×G ×mechanical reduction ratio

Note: When the electronic gear ratio is not equal to 1, there may be a remainder in gear ratio division. Meanwhile, position deviation may exist, and the maximum deviation is the minimum rotating amount of the motor (the minimum resolution ratio).

9.3 Stop characteristcs

In position control mode, when the servo motor is controlled by pulse train, there is a difference between instruction pulse and feedback pulse, this difference is called lag pulse. This value is accumulated in position deviation counter, of which the relationship to pulse frequency, electronic gear ratio and position percentage gain is as follows:

$$\varepsilon = \frac{f^{*} \times G}{K_p}$$

In the formula:

ε：Lag pulse（Puls）;

f: Instruction pulse frequency（Hz）;

Kp：Position percentage gain（1/S）;

G: Electronic gear ratio

Note: The above relationship is established under the condition that [Position feed forward gain] = 0%. If [Position feed forward gain] >0%, the lag pulse will be smaller than the value calculated by the above formula.

9.4 Calculation methods of servo drive unit and position controller selection

1）Instructed displacement and actual displacement

$$S = \frac{I}{\delta} \cdot \frac{CR}{CD} \cdot \frac{DR}{DD} \cdot \frac{1}{ST} \cdot \frac{ZD}{ZM} \cdot L$$

In the formula，

S：Actual displacement mm;

I：Instructed displacement mm;

δ：CNC minimum unit mm;

CR：Frequency multiplier factor of the instruction;

CD：Instruction frequency dividing coefficient

DR：Servo multiplier factor;

DD：Servo frequency dividing coefficient;

ST：Index number when servo motor rotates once;

ZD：Teeth number of motor side gears;

ZM：Teeth number of screw side gears;

L： Screw pitch mm

Usually, S=I, instructed value is equal to the actual value.

2）CNC maximum instruction speed

$$\frac{F}{60 \times \delta} \cdot \frac{CR}{CD} \leq f_{\max}$$

F in the formula is instruction speed mm/min;

f_{max}: CNC maximum output frequency Hz（128000 for GSK980）

3）Maximum speed of servo drive unit

$$V_{max} = n_{max} \times \frac{DR}{DD} \times L$$

In the formula, V_{max}: Servo system maximum allowable speed (mm/min) for working table;

n_{max}: Maximum allowable speed of servo motor (r/min);

Actual maximum speed of the machine tool is restricted by maximum speed of CNC and servo unit.

4）Minimum movement of the machine tool

$$\alpha = INT\,INT\,N \frac{CR}{CD} \frac{DR}{DD}_{min} \frac{1}{ST} \frac{ZD}{ZM} \frac{L}{\delta}$$

In the formula， α: Minimum movement of the machine tool mm;

N : Natural number;

INT（ ）: Round the number to the nearest integer;

NT [ ]$_{min}$: Minimum integer.